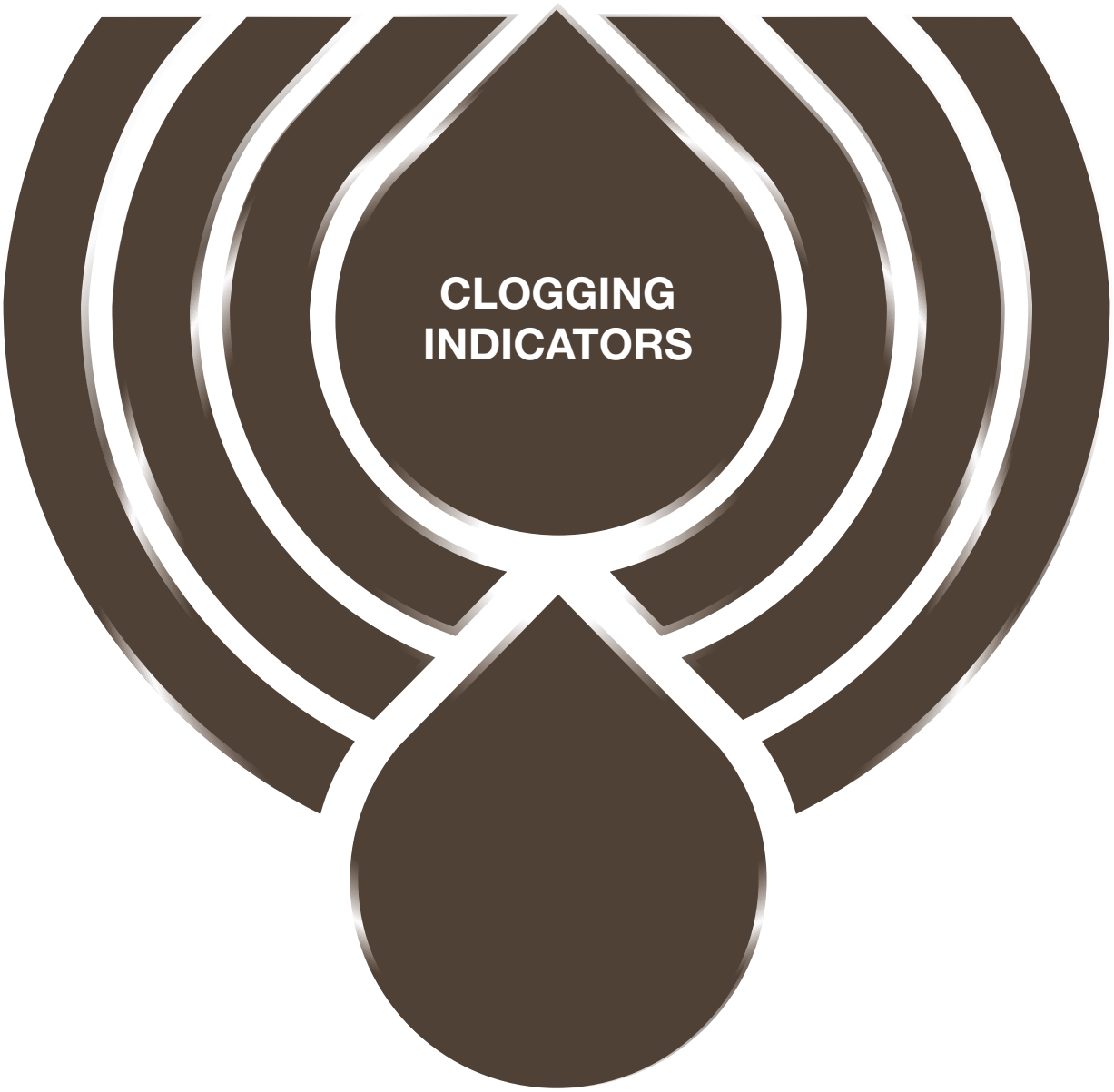
CLOGGING
INDICATORS

Clogging indicators are devices that check the life time of the filter elements. They measure the pressure drop through the filter element directly connected to the filter housing.
These devices trip when the clogging of the filter element causes a pressure drop increasing across the filter element.
Filter elements are efficient only if their Dirt Holding Capacity is fully exploited. This is achieved by using filter housings equipped with clogging indicators.
The indicator is set to alarm before the element becomes fully clogged.

MP Filtri can supply indicators of the following designs:
- Vacuum switches and gauges
- Pressure switches and gauges
- Differential pressure indicators

These type of devices can be provided with a visual, electrical or both signals. The electronic differential pressure clogging indicator is also available. It provides both analogical 4-20 mA output and digital warning (75% of clogging) and alarm (clogging) outputs.

In the following pages you can find a reference guide about the types of clogging indicators available in the different families of MP Filtri's Hydraulic Filtration range of products.

Clogging Indicators



DESIGNATION, ORDERING CODES & TECHNICAL DATA

INDEX

	Page
QUICK REFERENCE GUIDE	770
CLOGGING INDICATORS ORDERING CODES	
SUCTION FILTERS INDICATORS	775
RETURN FILTERS INDICATORS	776
RETURN / SUCTION FILTERS INDICATORS	778
SPIN-ON FILTERS INDICATORS	781
LOW & MEDIUM PRESSURE FILTERS INDICATORS	784
HIGH CAPACITY INDUSTRIAL FILTERS INDICATORS	785
HIGH PRESSURE FILTERS INDICATORS	786
STAINLESS STEEL HIGH PRESSURE FILTERS INDICATORS	787
FILTERS FOR POTENTIALLY EXPLOSIVE ATMOSPHERE INDICATORS	788
TECHNICAL DATA	
VACUUM INDICATORS	790
BAROMETRIC (PRESSURE) INDICATORS	792
DIFFERENTIAL PRESSURE INDICATORS	796
PLUGS	807

QUICK REFERENCE GUIDE

Ordering codes

Filter family	Filter series		Visual indicators	Electrical indicators	Electronic / Electrical-Visual indicators
SUCTION FILTERS		ELIXIR® SFEX 060-110	VVB20P01 VVS20P01	VEB21AA50P01	VLB21AA51P01 VLB21AA52P01 VLB21AA53P01 VLB21AA71P01
SUCTION FILTERS	Suction Line	SFMC250	VVA20P01 VVR20P01	VEA21xA50P01 VEA21xA50P01UL	VLA21xA51P01 VLA21xA52P01 VLA21xA53P01 VLA21xA71P01
SUCTION FILTERS	Without bypass	SFSC 500 - 503 - 504 - 505 SFSC 510 - 535 - 540	VVA20P01 VVR20P01	VEA21xA50P01 VEA21xA50P01UL	VLA21xA51P01 VLA21xA52P01 VLA21xA53P01 VLA21xA71P01
RETURN FILTERS	With bypass 1.75 bar	ELIXIR® RFEX 060-110	BVA14P01 BVR14P01 BVP15HP01 BVQ15HP01	BEA15HA50P01 BEA15HA50P01UL BEM15HA41P01	BLA15HA51P01 BLA15HA52P01 BLA15HA53P01 BLA15HA71P01
RETURN FILTERS	Without bypass	ELIXIR® RFEX 060-110	BVA25P01 BVR25P01 BVP20HP01 BVQ20HP01	BEA20HA50P01 BEA20HA50P01UL BEM20HA41P01	BLA20HA51P01 BLA20HA52P01 BLA20HA53P01 BLA20HA71P01
RETURN FILTERS	With bypass 1.75 bar	MDHC 250	BVA14P01 BVR14P01 BVP15HP01 BVQ15HP01 DVS12HP01	BEA15HA50P01 BEA15HA50P01UL BEM15HA41P01 DES12HA10P01 DES12HA30P01 DES12HA80P01	BLA15HA51P01 BLA15HA52P01 BLA15HA53P01 BLA15HA71P01
RETURN FILTERS	With bypass 3 bar	MDHC 250	BVA25P01 BVR25P01 BVP20HP01 BVQ20HP01 DVS25HP01	BEA20HA50P01 BEA20HA50P01UL BEM20HA41P01 BET20HF10P01 BET20HF30P01 BET25HF10P01 BET25HF30P01 DES25HA10P01 DES25HA30P01 DES25HA80P01	BLA20HA51P01 BLA20HA52P01 BLA20HA53P01 BLA20HA71P01
RETURN FILTERS	With bypass 1.75 bar	MPFX MPTX MPHC	BVA14P01 BVR14P01 BVP15HP01 BVQ15HP01	BEA15HA50P01 BEA15HA50P01UL BEM15HA41P01	BLA15HA51P01 BLA15HA52P01 BLA15HA53P01 BLA15HA71P01
RETURN FILTERS	With bypass 3 bar With bypass 2.5 bar	MPFX MPTX MPHC	BVA25P01 BVR25P01 BVP20HP01 BVQ20HP01	BEA20HA50P01 BEA20HA50P01UL BEM20HA41P01 BET20HF10P01 BET20HF30P01	BLA20HA51P01 BLA20HA52P01 BLA20HA53P01 BLA20HA71P01
RETURN FILTERS	With bypass 4.5 bar Return line	MPLX FRIC 025 - 040 - 100 - 250 - 630 - 850	DVA20xP01 DVM20xP01	DEA20xA50P01 DEM20xx10P01 DEM20xx20P01 DEM20xx30P01 DEM20xx35P01 DEU20VA50P01UL	DLA20xA51P01 DLA20xA52P01 DLA20xA71P01 DLE20xA50P01 DLE20xF50P01 DTA20xF70P01 DTI20xA70P01
RETURN FILTERS	Return line	FRIC 255	BVA25P01 BVR25P01 BVP20HP01 BVQ20HP01	BEA20HA50P01 BEA20HA50P01UL BEM20HA41P01	BLA20HA51P01 BLA20HA52P01 BLA20HA53P01 BLA20HA71P01

Ordering codes

Filter family	Filter series		Visual indicators	Electrical indicators	Electronic / Electrical-Visual indicators
RETURN / SUCTION FILTERS	With bypass 2.5 bar	MRSX 116 - 165 - 166 Suction line	VVB20P01 VVS20P01	VEB21AA50P01	VLB21AA51P01 VLB21AA52P01 VLB21AA53P01 VLB21AA71P01
		MRSX 116 - 165 - 166 Return line	BVA25P01 BVR25P01 BVP20HP01 BVQ20HP01	BEA20HA50P01 BEA20HA50P01UL BEM20HA41P01 BET25HF10P01 BET25HF30P01 BET25HF50P01	BLA20HA51P01 BLA20HA52P01 BLA20HA53P01 BLA20HA71P01
	With bypass 2.5 bar	LMP 124 MULTIPORT	BVA25P01 BVR25P01 BVP20HP01 BVQ20HP01 DVA20xP01 DVM20xP01	BEA20HA50P01 BEA20HA50P01UL BEM20HA41P01 BET25HF10P01 BET25HF30P01 BET25HF50P01 DEA20xA50P01 DEM20xx10P01 DEM20xx20P01 DEM20xx30P01 DEM20xx35P01 DEU20VA50P01UL	BLA20HA51P01 BLA20HA52P01 BLA20HA53P01 BLA20HA71P01 DLA20xA51P01 DLA20xA52P01 DLA20xA71P01 DLE20xA50P01 DLE20xF50P01 DTA20xF70P01 DTI20xA70P01
SPIN-ON FILTERS	Suction line	MPS 050 - 070 - 100 - 150 MPS 200 - 250 - 300 - 350	VVB20P01 VVS20P01	VEB21AA50P01	VLB21AA51P01 VLB21AA52P01 VLB21AA53P01 VLB21AA71P01
	Return line	MPS 050 - 070 - 100 - 150 MPS 200 - 250 - 300 - 350	BVA14P01 BVR14P01 BVP15HP01 BVQ15HP01	BEA15HA50P01 BEA15HA50P01UL BEM15HA41P01	BLA15HA51P01 BLA15HA52P01 BLA15HA53P01 BLA15HA71P01
	In-line	MPS 051 - 071 - 101 - 151 MPS 301 - 351	DVA12xP01 DVM12xP01 DVA20xP01 DVM20xP01	DEA12xA50P01 DEM12xAxxP01 DEA20xA50P01 DEM20xAxxP01 DEU20VA50P01UL	DLA12xA51P01 DLA12xA52P01 DLA12xA71P01 DLA20xA51P01 DLA20xA52P01 DLA20xA71P01 DLE12xA50P01 DLE12xF50P01 DLE20xF50P01 DLE20xF50P01 DTA12xF70P01 DTA20xF70P01 DTI12xA70P01 DTI20xA70P01

QUICK REFERENCE GUIDE

Ordering codes

Filter family	Filter series		Visual indicators	Electrical indicators	Electronic / Electrical-Visual indicators
LOW & MEDIUM PRESSURE FILTERS		ELIXIR® HFEX 060-110	DVS25HP01	DES25HA50P01	
		ELIXIR® LFEX 060-080-110-160	DVS25HP01	DES25HA10P01 DES25HA30P01 DES25HA50P01 DES25HA80P01	
	With bypass 3.5 bar	LMP 110 LMP 112 - 116 - 118 - 119 MULTIPORT LMP 120 - 122 - 123 MULTIPORT LMP 210 - 211 - LDP LMP 400 - 401 & 430 - 431 LMP 900 - 901 LMP 902 - 903 LMP 950 - 951 LMP 952 - 953 - 954 LMD 211 - 400 - 401 - 431 - 951 - LDD	DVA20xP01 DVM20xP01	DEA20xA50P01 DEM20xx10P01 DEM20xx20P01 DEM20xx30P01 DEM20xx35P01 DEU20VA50P01UL	DLA20xA51P01 DLA20xA52P01 DLA20xA71P01 DLE20xA50P01 DLE20xF50P01 DTA20xF70P01 DTI20xA70P01
	With bypass 2.5 bar	LPH 630	DVA20xP01 DVM20xP01	DEA20xA50P01 DEM20xx10P01 DEM20xx20P01 DEM20xx30P01 DEM20xx35P01 DEU20VA50P01UL	DLA20xA51P01 DLA20xA52P01 DLA20xA71P01 DLE20xA50P01 DLE20xF50P01 DTA20xF70P01 DTI20xA70P01
	With bypass 1.75 bar	LPH 630	DVA12xP01 DVM12xP01	DEA12xA50P01 DEM12xx10P01 DEM12xx20P01 DEM12xx30P01 DEM12xx35P01	DLA12xA51P01 DLA12xA52P01 DLA12xA71P01 DLE12xA50P01 DLE12xF50P01 DTA12xF70P01 DTI12xA70P01
	Without bypass	ELIXIR® HFEX 060-110	DVS40HP01	DES40HA50P01	
		ELIXIR® LFEX 060-080-110-160	DVS40HP01	DES40HA10P01 DES40HA30P01 DES40HA50P01 DES40HA80P01	
	Without bypass	LMP 110 LMP 112 - 116 - 118 - 119 MULTIPORT LMP 120 - 122 - 123 MULTIPORT LMP 210 - 211 - LDP LMP 400 - 401 & 430 - 431 LMP 900 - 901 LMP 902 - 903 LMP 950 - 951 LMP 952 - 953 - 954 LMD 211 - 400 - 401 - 431 - 951 - LDD LPH 630	DVA50xP01 DVM50xP01	DEA50xA50P01 DEM50xx10P01 DEM50xx20P01 DEM50xx30P01 DEM50xx35P01 DEU50VA50P01UL	DLA50xA51P01 DLA50xA52P01 DLA50xA71P01 DLE50xA50P01 DLE50xF50P01 DTA50xF70P01 DTI50xA70P01
HIGH CAPACITY INDUSTRIAL FILTERS	With bypass 3.5 bar	MLPX MLDX	DVA20xP01 DVM20xP01	DEA20xA50P01 DEM20xx10P01 DEM20xx20P01 DEM20xx30P01 DEM20xx35P01v	DLA20xA51P01 DLA20xA52P01 DLA20xA71P01 DLE20xA50P01 DLE20xF50P01 DTA20xF70P01 DTI20xA70P01
	With bypass 1.75 bar	MLPC MLDC	DVA12xP01 DVM12xP01	DEA12xA50P01 DEM12xx10P01 DEM12xx20P01 DEM12xx30P01 DEM12xx35P01	DLA12xA51P01 DLA12xA52P01 DLA12xA71P01 DLE12xA50P01 DLE12xF50P01 DTA12xF70P01 DTI12xA70P01
	Without bypass	MLDC MLPC	DVA50xP01 DVM50xP01	DEA50xA50P01 DEM50xx10P01 DEM50xx20P01 DEM50xx30P01 DEM50xx35P01	DLA50xA51P01 DLA50xA52P01 DLA50xA71P01 DLE50xA50P01 DLE50xF50P01 DTA50xF70P01 DTI50xA70P01

Ordering codes

Filter family	Filter series		Visual indicators	Electrical indicators	Electronic / Electrical-Visual indicators
HIGH PRESSURE FILTERS	With bypass 6 bar	FMP 039 - 065 - 135 - 320 FHP 010 - 011 - 065 - 135 - 350 - 351 - 500 FMMX 050 - 150 FMM 050 - 150 FHA 051 FHM 050 - 065 - 135 - 320 - 500 FHB 050 - 135 - 320 FHF 325 FHD 051 - 326 - 333	DVA50xP01 DVM50xP01	DEA50xA50P01 DEM50xx10P01 DEM50xx20P01 DEM50xx30P01 DEM50xx35P01 DEU50VA50P01UL	DLA50xA51P01 DLA50xA52P01 DLA50xA71P01 DLE50xA50P01 DLE50xF50P01 DTA50xF70P01 DTI50xA70P01
	Without bypass	FMP 039 - 065 - 135 - 320 FHP 010 - 011 - 065 - 135 - 350 - 351 - 500 FMMX 050 - 150 FMM 050 - 150 FHA 051 FHM 006 - 007 - 010 - 050 - 065 - 135 - 320 - 500 FHB 050 - 135 - 320 FHF 325 FHD 021 - 051 - 326 - 333	DVA70xP01 DVA95xP01 DVM70xP01 DVM95xP01	DEA70xA50P01 DEA95xA50P01 DEM70xx10P01 DEM70xx20P01 DEM70xx30P01 DEM70xx35P01 DEU70VA50P01UL DEM95xx10P01 DEM95xx20P01 DEM95xx30P01 DEM95xx35P01	DLA70xA51P01 DLA70xA52P01 DLA70xA71P01 DLA95xA51P01 DLA95xA52P01 DLA95xA71P01 DLE70xA50P01 DLE70xF50P01 DLE95xA50P01 DLE95xF50P01 DTA70xF70P01 DTA95xF70P01 DTI70xA70P01 DTI95xA70P01
STAINLESS STEEL HIGH PRESSURE FILTERS	With bypass 6 bar	FZH 012 - 040	DVZ50xP01	DEZ50xA50P01	DLZ50xA51P01 DLZ50xA52P01
	Without bypass	FZH 012 - 040	DVZ70xP01 DVZ95xP01	DEZ70xA50P01 DEZ95xA50P01	DLZ70xA51P01 DLZ70xA52P01 DLZ95xA51P01 DLZ95xA52P01
	With bypass 6 bar	FZP 039 - 136 FZB 039 FZM 039 FZD 051	DVX50xP01 DVY50xP01	DEX50xA50P01	DLX50xA51P01 DLX50xA52P01
	Without bypass	FZP 039 - 136 FZB 039 FZM 039 FZD 010 - 021 - 051	DVX70xP01 DVX95xP01 DVY70xP01 DVY95xP01	DEX70xA50P01 DEX95xA50P01	DLX70xA51P01 DLX70xA52P01 DLX95xA51P01 DLX95xA52P01
FILTERS FOR POTENTIALLY EXPLOSIVE ATMOSPHERE	With bypass 6 bar	FMMX 050 - 150	DVA50xP01 DVM50xP01	DEH50xA48P01 DEH50xA49P01 DEH50xA70P01	
	Without bypass	FMMX 050 - 150	DVA70xP01 DVA95xP01 DVM70xP01 DVM95xP01	DEH70xA48P01 DEH70xA49P01 DEH70xA70P01	
	With bypass 6 bar	FZP 039 - 136	DVX50xP01 DVY50xP01	DEH50xA48P01 DEH50xA49P01 DEH50xA70P01	
	Without bypass	FZP 039 - 136	DVX70xP01 DVX95xP01 DVY70xP01 DVY95xP01	DEH70xA48P01 DEH70xA49P01 DEH70xA70P01	
	With bypass 6 bar	FZH 012 - 040	DVZ50xP01		
	Without bypass	FZH 012 - 040	DVZ70xP01 DVZ95xP01		

Suitable indicator types

V ACUUM INDICATORS

Vacuum indicators are used on the Suction line to check the efficiency of the filter element.
They measure the pressure downstream of the filter element.
Standard items are produced with R 1/4" EN 10226 connection.
Available products with R 1/8" EN 10226 to be fitted on MPS series.
Vacuum indicators are identified in the Hydraulic Filtration catalogue and in the Quick Reference Guide table by the letter "V".

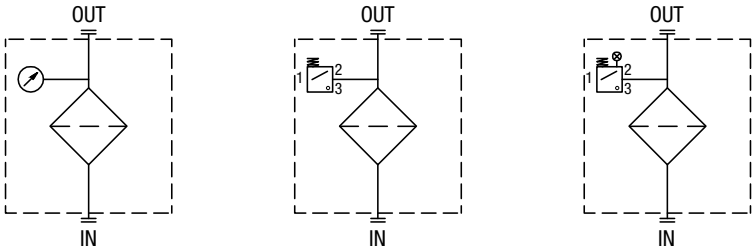

Example:
V VVB20P01

B AROMETRIC (PRESSURE) INDICATORS

Pressure indicators are used on the Return line to check the efficiency of the filter element.
They measure the pressure upstream of the filter element.
Standard items are produced with R 1/8" EN 10226 connection.
Barometric (pressure) indicators are identified in the Hydraulic Filtration catalogue and in the Quick Reference Guide table by the letter "B"

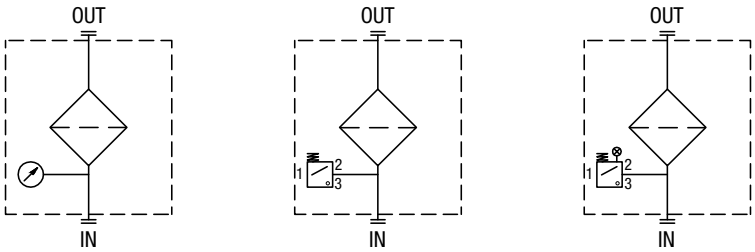

Example:
B BVA14P01

D IFFERENTIAL PRESSURE INDICATORS

Differential pressure indicators are used on the Pressure line to check the efficiency of the filter element.
They measure the pressure upstream and downstream of the filter element (differential pressure).
Standard items are produced with special connection G 1/2" size.
Also available in Stainless Steel models.
Differential pressure indicators are identified in the Hydraulic Filtration catalogue and in the Quick Reference Guide table by the letter "D"

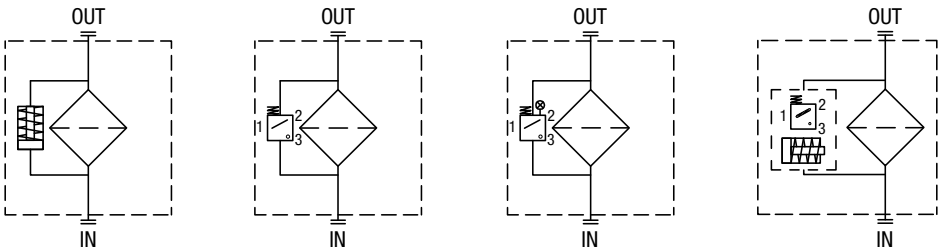

Example:
D DVA20xP01

Designation & Ordering code

APPLICABLE VACUUM INDICATORS BY FILTER SERIES

Filter Series	VEA	VEB	VLA	VLB	VVA	VVB	VVR	VVS
STRC	-	-	-	-	-	-	-	-
MPAC	-	-	-	-	-	-	-	-
SFEX	-	•	-	•	-	•	-	•
SFMC	•	-	•	-	•	-	•	-
SFSC	•	-	•	-	•	-	•	-

VACUUM INDICATORS

Configuration example 1:	VE	A	21	V	A	50	P01	EX
Configuration example 2:	VL	B	21	A	A	71	P01	
Configuration example 3:	VV	R	20				P01	

Series

VE Electrical vacuum indicator
VL Electrical/Visual vacuum indicator
VV Vacuum gauge

Type VE - VL

A Connection EN 10226 - R1/4”
B Connection EN 10226 - R1/8”

Type VV	SFxC	SFEX
A Axial connection EN 10226 - R1/4”	•	-
B Axial connection EN 10226 - R1/8”	-	•
R Radial connection EN 10226 - R1/4”	•	-
S Radial connection EN 10226 - R1/8”	-	•

Vacuum setting	VE	VL	VVA	VVB	VVR	VVS
20 0.20 bar	-	-	•	•	•	•
21 0.21 bar	•	•	-	-	-	-

Seals	VEA - VLA	VEB - VLB	VV
A NBR	•	•	-
V FPM	•	-	-

Thermostat	VE	VL	VV
A Without	•	•	-

Electrical connections	VE	VL	VV
50 Connection EN 175301-803	•	-	-
51 Connection EN 175301-803, transparent base with lamps 24 Vdc	-	•	-
52 Connection EN 175301-803, transparent base with lamps 110 Vdc	-	•	-
53 Connection EN 175301-803, transparent base with lamps 230 Vac	-	•	-
71 Connection IEC 61076-2-101 D (M12), black base with lamps 24 Vdc	-	•	-

Option

P01 MP Filtri standard
Pxx Customized

Certifications	VEA21A	VEA21V	VEB	VL	VV
Without	•	•	•	•	•
EX ATEX certification	•	•	•	-	-
UL UL certification	•	-	-	-	-

Designation & Ordering code

APPLICABLE BAROMETRIC (PRESSURE) INDICATORS BY FILTER SERIES

Filter Series	BEA	BEM	BET	BLA	BVA	BVR	BVP	BVQ
RFEX	•	•	-	•	•	•	•	•
MPFX	•	•	•	•	•	•	•	•
MPLX	-	-	-	-	-	-	-	-
MPTX	•	•	•	•	•	•	•	•
MFBX	-	-	-	-	-	-	-	-
MDHC	•	•	•	•	•	•	•	•
MPHC	•	•	-	•	•	•	•	•
MPIC	-	-	-	-	-	-	-	-
FRIC (all sizes, except 255)	-	-	-	-	-	-	-	-
FRIC 255	•	•	-	•	•	•	•	•
RFMC	-	-	-	-	-	-	-	-

BAROMETRIC (PRESSURE) INDICATORS

Configuration example:								
Configuration example 1:	BE	A	15	H	A	41	P01	EX
Configuration example 2:	BL	A	20	H	A	71	P01	
Configuration example 3:	BV	R	14				P01	
Configuration example 4:	BV	P	20	H			P01	

Series

- **BE** Electrical pressure indicator
- **BL** Electrical/Visual pressure indicator
- **BV** Visual pressure indicator

Type	BE	BL	BV
A Standard type	•	•	**A** Axial connection pressure gauge
M With wired electrical connection	•	-	**R** Radial connection pressure gauge
T With thermal switch	•	-	**P** Visual indicator with automatic reset
			Q Visual indicator with manual reset

Pressure setting	BEA-BEM	BET	BLA	BVA-BVR-BVE-BVH	BVP-BVQ-BVN-BVO
14 1.4 bar	-	-	-	•	-
15 1.5 bar	•	-	•	-	•
20 2.0 bar	•	•	•	-	•
25 2.5 bar	-	•	-	•	-

Seals	BE	BLA	BVA-BVR-BVE-BVH	BVP-BVQ-BVN-BVO
H HNBR	•	•	-	•

Thermostat	BEA-BEM	BET	BLA	BV
A Without thermostat	•	-	•	-
F With thermostat	-	•	-	-

Electrical connections	BEA	BEM	BET	BL	BV
10 Connection AMP Superseal series 1,5	-	-	•	-	-
30 Connection Deutsch DT-04-2-P	-	-	•	-	-
41 Connection via four-core cable	-	•	-	-	-
50 Connection EN 175301-803	•	-	-	-	-
51 Connection EN 175301-803, transparent base with lamps 24 Vdc	-	-	-	•	-
52 Connection EN 175301-803, transparent base with lamps 110 Vdc	-	-	-	•	-
53 Connection EN 175301-803, transparent base with lamps 230 Vac	-	-	-	•	-
71 Connection IEC 61076-2-101 D (M12), black base with lamps 24 Vdc	-	-	-	•	-

Option	
P01	MP Filtri standard
Pxx	Customized

Certifications	BEA	BEM-BET	BL	BV
Without	•	•	•	•
EX ATEX certification	•	-	-	-
UL UL certification	•	-	-	-

Designation & Ordering code

APPLICABLE DIFFERENTIAL PRESSURE INDICATORS BY FILTER SERIES

Filter Series	DEA	DEM	DEU	DES	DLA	DLE	DTA	DTI	DVA	DVM	DVS
RFEX	-	-	-	-	-	-	-	-	-	-	-
MPFX	-	-	-	-	-	-	-	-	-	-	-
MPLX	•	•	•	-	•	•	•	•	•	•	-
MPTX	-	-	-	-	-	-	-	-	-	-	-
MFBX	-	-	-	-	-	-	-	-	-	-	-
MDHC	-	-	-	•	-	-	-	-	-	-	•
MPHC	-	-	-	-	-	-	-	-	-	-	-
MPIC	-	-	-	-	-	-	-	-	-	-	-
FRIC (all sizes, except 255)	•	•	•	-	•	•	•	•	•	•	-
FRIC 255	-	-	-	-	-	-	-	-	-	-	-
RFMC	-	-	-	-	-	-	-	-	-	-	-

DIFFERENTIAL PRESSURE INDICATORS

Configuration example								
1:	DE	M	20	H	F	50	P01	
2:	DE	U	50	V	A	50	P01	UL
3:	DL	E	20	V	A	71	P01	
4:	DT	A	20	H	F	70	P01	
5:	DV	M	20	V			P01	

Series

DE Electrical differential pressure indicator
DL Electrical/Visual differential pressure indicator
DT Electrical differential pressure indicator
DV Visual differential pressure indicator

Type	DE	DL	DT
A Standard type	•	•	•
I I-O Link type	-	-	•
M With wired electrical connection	•	-	-
U Standard type 210 bar, UL certified	•	-	-
E For high power supply	-	•	-
S Compact version	•	-	-

DV	
A	With automatic reset
M	With manual reset
S	With automatic reset

Pressure setting	DEA	DEM	DEU	DES	DL	DT	DVA	DVM	DVS
12 1.2 bar	-	-	-	•	-	-	-	-	•
20 2.0 bar	•	•	•	-	•	•	•	•	
25 2.5 bar	-	-	-	•	-	-	-	-	•
50 5.0 bar	•	•	•	-	•	•	•	•	-

Seals	DEA	DEM	DEU	DES	DL	DT	DVA	DVM	DVS
H HNBR	•	•	-	•	•	•	•	•	•
V FPM	•	•	•	-	•	•	•	•	-

Thermostat	DEA	DEM	DEU	DES	DLA	DLE	DTA	DTI
A Without thermostat	•	•	•	•	•	•	-	•
F With thermostat	-	•	-	-	-	•	•	-

Electrical connections	DEA	DEM	DEU	DES	DLA	DLE	DT
10 Connection AMP Superseal series 1.5	-	•	-	•	-	-	-
20 Connection AMP Timer Junior	-	•	-	-	-	-	-
30 Connection Deutsch DT-04-2-P	-	•	-	•	-	-	-
35 Connection Deutsch DT-04-3-P	-	•	-	-	-	-	-
50 Connection EN 175301-803	•	-	•	-	-	•	-
51 Connection EN 175301-803, transparent base with lamps 24 Vdc	-	-	-	-	•	-	-
52 Connection EN 175301-803, transparent base with lamps 110 Vdc	-	-	-	-	•	-	-
70 Connection IEC 61076-2-101 D (M12)	-	-	-	-	-	-	•
71 Connection IEC 61076-2-101 D (M12), black base with lamps 24 Vdc	-	-	-	-	•	-	-
80 Connection Stud #10-32 UNF	-	-	-	•	-	-	-

Option	
P01	MP Filtri standard
Pxx	Customized

Certifications	DEU	OTHERS
Without	-	•
UL UL certification	•	-

PLUGS

Configuration example	T2	H

Series

T2 Plug
T4 Plug

Seals	T2	T4
A NBR	-	•
H HNBR	•	-
V FPM	•	-

Designation & Ordering code

APPLICABLE VACUUM INDICATORS BY FILTER SERIES

Filter Series	VEB	VLB	VVB	VVS
MRSX	•	•	•	•
LMP124	-	-	-	-

VACUUM INDICATORS

Configuration example 1:	VE	B	21	V	A	50	P01	EX
Configuration example 2:	VL	B	21	A	A	71	P01	
Configuration example 3:	VV	S	20				P01	

Series

VE Electrical vacuum indicator
VL Electrical/Visual vacuum indicator
VV Vacuum gauge

Type VE - VL

B Connection EN 10226 - R1/8”

Type VV

B Axial connection EN 10226 - R1/8”
S Radial connection EN 10226 - R1/8”

Vacuum setting	VE	VL	VVB	VVS
20 0.20 bar	-	-	•	•
21 0.21 bar	•	•	-	-

Seals	VEB - VLB	VV
A NBR	•	-
V FPM	-	-

Thermostat	VE	VL	VV
A Without	•	•	-

Electrical connections	VE	VL
50 Connection EN 175301-803	•	-
51 Connection EN 175301-803, transparent base with lamps 24 Vdc	-	•
52 Connection EN 175301-803, transparent base with lamps 110 Vdc	-	•
53 Connection EN 175301-803, transparent base with lamps 230 Vac	-	•
71 Connection IEC 61076-2-101 D (M12), black base with lamps 24 Vdc	-	•

Option

P01 MP Filtri standard
Pxx Customized

Certifications	VEB	VL	VV
Without	•	•	•
EX ATEX certification	•	-	-

Designation & Ordering code

APPLICABLE BAROMETRIC (PRESSURE) INDICATORS BY FILTER SERIES

Filter Series	BEA	BEM	BET	BLA	BVA	BVR	BVP	BVQ
MRSX	•	•	•	•	•	•	•	•
LMP124	•	•	•	•	•	•	•	•

BAROMETRIC (PRESSURE) INDICATORS

Configuration example 1:	BE	M	15	H	A	41	P01	EX
Configuration example 2:	BL	A	20	H	A	71	P01	
Configuration example 3:	BV	R	14				P01	
Configuration example 4:	BV	P	20	H			P01	

Series

BE Electrical pressure indicator
BL Electrical/Visual pressure indicator
BV Visual pressure indicator

Type	BE	BL
A Standard type	•	•
M With wired electrical connection	•	-
T With thermal switch	•	-

BV	
A	Axial connection pressure gauge
R	Radial connection pressure gauge
P	Visual indicator with automatic reset
Q	Visual indicator with manual reset

Pressure setting	BEA-BEM	BET	BLA	BVA-BVR	BVP-BVQ
14 1.4 bar	-	-	-	•	-
15 1.5 bar	•	-	•	-	•
20 2.0 bar	•	•	•	-	•
25 2.5 bar	-	•	-	•	-

Seals	BE	BLA	BVA-BVR	BVP-BVQ
H HNBR	•	•	-	•

Thermostat	BEA-BEM	BET	BLA	BV
A Without thermostat	•	-	•	-
F With thermostat	-	•	-	-

Electrical connections	BEA	BEM	BET	BL
10 Connection AMP Superseal series 1.5	-	-	•	-
30 Connection Deutsch DT-04-2-P	-	-	•	-
41 Connection via four-core cable	-	•	-	-
50 Connection EN 175301-803	•	-	•	-
51 Connection EN 175301-803, transparent base with lamps 24 Vdc	-	-	-	•
52 Connection EN 175301-803, transparent base with lamps 110 Vdc	-	-	-	•
53 Connection EN 175301-803, transparent base with lamps 230 Vac	-	-	-	•
71 Connection IEC 61076-2-101 D (M12), black base with lamps 24 Vdc	-	-	-	•

Option

P01 MP Filtri standard
Pxx Customized

Certifications	BEA	BEM-BET	BL	BV
Without	•	•	•	•
EX ATEX certification	•	-	-	-
UL UL certification	•	-	-	-

Designation & Ordering code

APPLICABLE DIFFERENTIAL PRESSURE INDICATORS BY FILTER SERIES

Filter Series	DEA	DEM	DEU	DLA	DLE	DTA	DTI	DVA	DVM
MRSX	-	-	-	-	-	-	-	-	-
LMP124	•	•	•	•	•	•	•	•	•

DIFFERENTIAL PRESSURE INDICATORS

Configuration example 1: DE | M | 12 | H | F | 50 | P01
Configuration example 2: DE | U | 50 | V | A | 50 | P01 | UL
Configuration example 3: DL | E | 20 | V | A | 71 | P01
Configuration example 4: DT | A | 50 | H | F | 70 | P01
Configuration example 5: DV | M | 70 | V | | | P01

Series

DE	Electrical differential pressure indicator
DL	Electrical/Visual differential pressure indicator
DT	Electronic differential pressure indicator
DV	Visual differential pressure indicator

Type	DE	DL	DT	DV
A Standard type	•	•	•	**A** With automatic reset
I I-O Link type	-	-	•	**M** With manual reset
M With wired electrical connection	•	-	-	
U Standard type 210 bar, UL certified	•	-	-	
E For high power supply	-	•	-	

Pressure setting	DEA	DEM	DEU	DLA	DLE	DT	DVA	DVM
20 2.0 bar	•	•	•	•	•	•	•	•

Seals	DEA	DEM	DEU	DLA	DLE	DT	DVA	DVM
H HNBR	•	•	-	•	•	•	•	•
V FPM	•	•	•	•	•	•	•	•

Thermostat	DEA	DEM	DEU	DLA	DLE	DTA	DTI
A Without thermostat		•	•	•	•	•	-	•
F With thermostat		-	•	-	-	•	•	-

Electrical connections	DEA	DEM	DEU	DLA	DLE	DT
10 Connection AMP Superseal series 1.5	-	•	-	-	-	-
20 Connection AMP Timer Junior	-	•	-	-	-	-
30 Connection Deutsch DT-04-2-P	-	•	-	-	-	-
35 Connection Deutsch DT-04-3-P	-	•	-	-	-	-
50 Connection EN 175301-803	•	-	•	-	•	-
51 Connection EN 175301-803, transparent base with lamps 24 Vdc	-	-	-	•	-	-
52 Connection EN 175301-803, transparent base with lamps 110 Vdc	-	-	-	•	-	-
70 Connection IEC 61076-2-101 D (M12)	-	-	-	-	-	•
71 Connection IEC 61076-2-101 D (M12), black base with lamps 24 Vdc	-	-	-	•	-	-

Option

P01	MP Filtri standard
Pxx	Customized

Certifications	DEU	OTHERS
Without	-	•
UL UL certification	•	-

PLUGS

Configuration example: T2 | H

Series

T2	Plug

Seals

H	HNBR
V	FPM

APPLICABLE VACUUM INDICATORS BY FILTER SERIES

Filter Series	VEA	VEB	VLA	VLB	VVA	VVB	VVR	VVS
MPS	-	•	-	•	-	•	-	•

VACUUM INDICATORS

Configuration example 1:	VE	B	21	A	A	50	P01	EX
Configuration example 2:	VL	B	21	A	A	71	P01	
Configuration example 3:	VV	S	20				P01	

Series
- **VE** Electrical vacuum indicator
- **VL** Electrical/Visual vacuum indicator
- **VV** Vacuum gauge

Type VE - VL
- **B** Connection EN 10226 - R1/8”

Type VV
- **B** Axial connection EN 10226 - R1/8”
- **S** Radial connection EN 10226 - R1/8”

Vacuum setting	VE	VL	VVB	VVS
20 0.20 bar	-	-	•	•
21 0.21 bar	•	•	-	-

Seals	VEB - VLB	VV
A NBR	•	-
V FPM	-	-

Thermostat	VE	VL	VV
A Without	•	•	-

Electrical connections	VE	VL
50 Connection EN 175301-803	•	-
51 Connection EN 175301-803, transparent base with lamps 24 Vdc	-	•
52 Connection EN 175301-803, transparent base with lamps 110 Vdc	-	•
53 Connection EN 175301-803, transparent base with lamps 230 Vac	-	•
71 Connection IEC 61076-2-101 D (M12), black base with lamps 24 Vdc	-	•

Option
- **P01** MP Filtri standard
- **Pxx** Customized

Certifications	VEB	VL	VV
Without	•	•	•
EX ATEX certification	•	-	-

Designation & Ordering code

APPLICABLE BAROMETRIC (PRESSURE) INDICATORS BY FILTER SERIES

Filter Series	BEA	BEM	BET	BLA	BVA	BVR	BVP	BVQ
MPS	•	•	•	•	•	•	•	•

BAROMETRIC (PRESSURE) INDICATORS

Configuration example 1:	BE	M	15	H	A	41	P01	EX
Configuration example 2:	BL	A	20	H	A	71	P01	
Configuration example 3:	BV	R	14				P01	
Configuration example 4:	BV	P	20	H			P01	

Series

BE Electrical pressure indicator
BL Electrical/Visual pressure indicator
BV Visual pressure indicator

Type	BE	BL
A Standard type	•	•
M With wired electrical connection	•	-

BV

A Axial connection pressure gauge
R Radial connection pressure gauge
P Visual indicator with automatic reset
Q Visual indicator with manual reset

Pressure setting	BEA-BEM	BET	BLA	BVA-BVR	BVP-BVQ
14 1.4 bar	-	-	-	•	-
15 1.5 bar	•	-	•	-	•
20 2.0 bar	•	•	•	-	•
25 2.5 bar	-	•	-	•	-

Seals	BE	BLA	BVA-BVR	BVP-BVQ
H HNBR	•	•	-	•

Thermostat	BEA-BEM	BET	BLA	BV
A Without thermostat	•	-	•	-
F With thermostat	-	•	-	-

Electrical connections	BEA	BEM	BL
10 Connection AMP Superseal series 1.5	-	-	-
30 Connection Deutsch DT-04-2-P	-	-	-
41 Connection via four-core cable	-	•	-
50 Connection EN 175301-803	•	-	-
51 Connection EN 175301-803, transparent base with lamps 24 Vdc	-	-	•
52 Connection EN 175301-803, transparent base with lamps 110 Vdc	-	-	•
53 Connection EN 175301-803, transparent base with lamps 230 Vac	-	-	•
71 Connection IEC 61076-2-101 D (M12), black base with lamps 24 Vdc	-	-	•

Option

P01 MP Filtri standard
Pxx Customized

Certifications	BEA	BEM-BET	BL	BV
Without	•	•	•	•
EX ATEX certification	•	-	-	-
UL UL certification	•	-	-	-

Designation & Ordering code

APPLICABLE DIFFERENTIAL PRESSURE INDICATORS BY FILTER SERIES

Filter Series	DEA	DEM	DEU	DLA	DLE	DTA	DTI	DVA	DVM
MPS	•	•	•	•	•	•	•	•	•

DIFFERENTIAL PRESSURE INDICATORS

Configuration example 1:	DE	M	12	H	F	50	P01	
Configuration example 2:	DE	U	50	V	A	50	P01	UL
Configuration example 3:	DL	E	20	V	A	71	P01	
Configuration example 4:	DT	A	50	H	F	70	P01	
Configuration example 5:	DV	M	70	V			P01	

Series

DE Electrical differential pressure indicator
DL Electrical/Visual differential pressure indicator
DT Electronic differential pressure indicator
DV Visual differential pressure indicator

Type

		DE	DL	DT
A	Standard type	•	•	•
I	I-O Link type	-	-	•
M	With wired electrical connection	•	-	-
U	Standard type 210 bar, UL certified	•	-	-
E	For high power supply	-	•	-

DV

A	With automatic reset
M	With manual reset

Pressure setting

		DEA	DEM	DEU	DLA	DLE	DT	DVA	DVM
12	1.2 bar	•	•	-	•	•	•	•	•
20	2.0 bar	•	•	•	•	•	•	•	•

Seals

		DEA	DEM	DEU	DLA	DLE	DT	DVA	DVM
H	HNBR	•	•	-	•	•	•	•	•
V	FPM	•	•	•	•	•	•	•	•

Thermostat

		DEA	DEM	DEU	DLA	DLE	DTA	DTI
A	Without thermostat	•	•	•	•	•	-	•
F	With thermostat	-	•	-	-	•	•	-

Electrical connections

		DEA	DEM	DEU	DLA	DLE	DT
10	Connection AMP Superseal series 1.5	-	•	-	-	-	-
20	Connection AMP Timer Junior	-	•	-	-	-	-
30	Connection Deutsch DT-04-2-P	-	•	-	-	-	-
35	Connection Deutsch DT-04-3-P	-	•	-	-	-	-
50	Connection EN 175301-803	•	-	•	-	•	-
51	Connection EN 175301-803, transparent base with lamps 24 Vdc	-	-	-	•	-	-
52	Connection EN 175301-803, transparent base with lamps 110 Vdc	-	-	-	•	-	-
70	Connection IEC 61076-2-101 D (M12)	-	-	-	-	-	•
71	Connection IEC 61076-2-101 D (M12), black base with lamps 24 Vdc	-	-	-	•	-	-

Option

P01	MP Filtri standard
Pxx	Customized

Certifications

		DEU	OTHERS
	Without	-	•
UL	UL certification	•	-

PLUGS

Configuration example	T2	H	

Series

T2 Plug

Seals

H HNBR
V FPM

Designation & Ordering code

APPLICABLE DIFFERENTIAL PRESSURE INDICATORS BY FILTER SERIES

Filter Series	DEA	DEM	DEU	DES *10-*30-*80	DES *50	DLA	DLE	DTA	DTI	DVA	DVM	DVS
HFEX	-	-	-	-	•	-	-	-	-	-	-	•
LFEX	-	-	-	•	•	-	-	-	-	-	-	•
LMP 110	•	•	•	-	-	•	•	•	•	•	•	-
LMP 112 / 123 MULTIPORT	•	•	•	-	-	•	•	•	•	•	•	-
LMP 210 - 211	•	•	•	-	-	•	•	•	•	•	•	-
LMP 400 - 401	•	•	•	-	-	•	•	•	•	•	•	-
LMP 430 - 431	•	•	•	-	-	•	•	•	•	•	•	-
LMP 950 - 951	•	•	•	-	-	•	•	•	•	•	•	-
LMP 952 - 953 - 954	•	•	•	-	-	•	•	•	•	•	•	-
LMD 211	•	•	•	-	-	•	•	•	•	•	•	-
LMD 400 - 401 & 431	•	•	•	-	-	•	•	•	•	•	•	-
LMD 951	•	•	•	-	-	•	•	•	•	•	•	-
LDP-LDD	•	•	•	-	-	•	•	•	•	•	•	-
LMP 900 - 901	•	•	•	-	-	•	•	•	•	•	•	-
LMP 902 - 903	•	•	•	-	-	•	•	•	•	•	•	-
LPH 630	•	•	•	-	-	•	•	•	•	•	•	-

DIFFERENTIAL PRESSURE INDICATORS

Configuration example 1:	DE	M	20	H	F	50	P01	
Configuration example 2:	DE	U	50	V	A	50	P01	UL
Configuration example 3:	DL	E	50	V	A	71	P01	
Configuration example 4:	DT	A	20	H	F	70	P01	
Configuration example 5:	DV	M	50	V			P01	

Series

DE	Electrical differential pressure indicator
DL	Electrical/Visual differential pressure indicator
DT	Electronic differential pressure indicator
DV	Visual differential pressure indicator

Type	DE	DL	DT
A Standard type	•	•	•
I I-O Link type	-	-	•
M With wired electrical connection	•	-	-
U Standard type 210 bar, UL certified	•	-	-
E For high power supply	-	•	-
S Compact version	•	-	-

DV	
A	With automatic reset
M	With manual reset
S	With automatic reset

Pressure setting	DEA	DEM	DEU	DES	DLA	DLE	DTA	DTI	DVA	DVM	DVS
12 1.2 bar	•	•	-	•	•	•	•	•	•	•	•
20 2.0 bar	•	•	•	-	•	•	•	•	•	•	-
25 2.5 bar	-	-	-	•	-	-	-	-	-	-	•
40 4.0 bar	-	-	-	•	-	-	-	-	-	-	•
50 5.0 bar	•	•	•	-	•	•	•	•	•	•	-

Seals	DEA	DEM	DEU	DES	DL	DT	DVA	DVM	DVS
H HNBR	•	•	-	•	•	•	•	•	•
V FPM	•	•	•	-	•	•	•	•	-

Thermostat	DEA	DEM	DEU	DES	DLA	DLE	DTA	DTI
A Without thermostat	•	•	•	•	•	•	-	•
F With thermostat	-	•	-	-	-	•	•	-

Electrical connections	DEA	DEM	DEU	DES	DLA	DLE	DT
10 Connection AMP Superseal series 1.5	-	•	-	•	-	-	-
20 Connection AMP Timer Junior	-	•	-	-	-	-	-
30 Connection Deutsch DT-04-2-P	-	•	-	•	-	-	-
35 Connection Deutsch DT-04-3-P	-	•	-	-	-	-	-
50 Connection EN 175301-803	•	-	•	•	-	•	-
51 Connection EN 175301-803, transparent base with lamps 24 Vdc	-	-	-	-	•	-	-
52 Connection EN 175301-803, transparent base with lamps 110 Vdc	-	-	-	-	•	-	-
70 Connection IEC 61076-2-101 D (M12)	-	-	-	-	-	-	•
71 Connection IEC 61076-2-101 D (M12), black base with lamps 24 Vdc	-	-	-	-	•	-	-
80 Connection Stud #10-32 UNF	-	-	-	•	-	-	-

Option	
P01	MP Filtri standard
Pxx	Customized

Certifications	DEU	OTHERS
Without	-	•
UL UL certification	•	-

PLUGS

Example: T2 H

Series	
T2	Plug
T4	Plug

Seals	T2	T4
A NBR	-	•
H HNBR	•	-
V FPM	•	-

Designation & Ordering code

APPLICABLE DIFFERENTIAL PRESSURE INDICATORS BY FILTER SERIES

Filter Series	DEA	DEM	DLA	DLE	DTA	DTI	DVA	DVM
MLPX	•	•	•	•	•	•	•	•
MLPC	•	•	•	•	•	•	•	•
MLDX	•	•	•	•	•	•	•	•
MLDC	•	•	•	•	•	•	•	•

DIFFERENTIAL PRESSURE INDICATORS

Configuration example 1:	DE	M	20	H	F	50	P01
Configuration example 2:	DT	I	50	V	A	70	P01
Configuration example 3:	DL	E	50	V	A	71	P01
Configuration example 4:	DT	A	20	H	F	70	P01
Configuration example 5:	DV	M	50	V			P01

Series

DE Electrical differential pressure indicator
DL Electrical/Visual differential pressure indicator
DT Electronic differential pressure indicator
DV Visual differential pressure indicator

Type	DE	DL	DT	DV
A Standard type	•	•	•	**A** With automatic reset
I I-O Link type	-	-	•	**M** With manual reset
M With wired electrical connection	•	-	-	
E For high power supply	-	•	-	

Pressure setting	DEA	DEM	DLA	DLE	DTA	DTI	DVA	DVM
12 1.2 bar	•	•	•	•	•	•	•	•
20 2.0 bar	•	•	•	•	•	•	•	•
25 2.5 bar	-	-	-	-	-	-	-	-
40 4.0 bar	-	-	-	-	-	-	-	-
50 5.0 bar	•	•	•	•	•	•	•	•

Seals	DEA	DEM	DL	DT	DVA	DVM
H HNBR	•	•	•	•	•	•
V FPM	•	•	•	•	•	•

Thermostat	DEA	DEM	DLA	DLE	DTA	DTI
A Without thermostat	•	•	•	•	-	•
F With thermostat	-	•	-	•	•	-

Electrical connections	DEA	DEM	DLA	DLE	DT
10 Connection AMP Superseal series 1.5	-	•	-	-	-
20 Connection AMP Timer Junior	-	•	-	-	-
30 Connection Deutsch DT-04-2-P	-	•	-	-	-
35 Connection Deutsch DT-04-3-P	-	•	-	-	-
50 Connection EN 175301-803	•	-	-	•	-
51 Connection EN 175301-803, transparent base with lamps 24 Vdc	-	-	•	-	-
52 Connection EN 175301-803, transparent base with lamps 110 Vdc	-	-	•	-	-
70 Connection IEC 61076-2-101 D (M12)	-	-	-	-	•
71 Connection IEC 61076-2-101 D (M12), black base with lamps 24 Vdc	-	-	•	-	-

Option

P01 MP Filtri standard
Pxx Customized

PLUGS

Example:	T2	H

Series

T2 Plug

Seals

A NBR	-
H HNBR	•
V FPM	•

Designation & Ordering code

APPLICABLE DIFFERENTIAL PRESSURE INDICATORS BY FILTER SERIES

Filter Series	DEA	DEM	DEU	DLA	DLE	DTA	DTI	DVA	DVM
FMMX	•	•	•	•	•	•	•	•	•
FMM	•	•	•	•	•	•	•	•	•
FHA	•	•	•	•	•	•	•	•	•
FMP 039	•	•	•	•	•	•	•	•	•
FMP	•	•	•	•	•	•	•	•	•
FHP	•	•	•	•	•	•	•	•	•
FHM	•	•	•	•	•	•	•	•	•
FHB	•	•	•	•	•	•	•	•	•
FHF	•	•	•	•	•	•	•	•	•
FHD	•	•	•	•	•	•	•	•	•
HPB	-	-	-	-	-	-	-	-	-

DIFFERENTIAL PRESSURE INDICATORS

Configuration example 1:	DE	M	12	H	F	50	P01	
Configuration example 2:	DE	U	50	V	A	50	P01	UL
Configuration example 3:	DL	E	20	V	A	71	P01	
Configuration example 4:	DT	A	50	H	F	70	P01	
Configuration example 5:	DV	M	70	V			P01	

Series

DE	Electrical differential pressure indicator
DL	Electrical/Visual differential pressure indicator
DT	Electronic differential pressure indicator
DV	Visual differential pressure indicator

Type

		DE	DL	DT	DV
A	Standard type	•	•	•	
I	I-O Link type	-	-	•	
M	With wired electrical connection	•	-	-	
U	Standard type 210 bar, UL certified	•	-	-	
E	For high power supply	-	•	-	

DV

A	With automatic reset
M	With manual reset

Pressure setting

		DEA	DEM	DEU	DLA	DLE	DT	DVA	DVM
50	5.0 bar	•	•	•	•	•	•	•	•
70	7.0 bar	•	•	•	•	•	•	•	•
95	9.5 bar	•	•	-	•	•	•	•	•

Seals

		DEA	DEM	DEU	DLA	DLE	DT	DVA	DVM
H	HNBR	•	•	-	•	•	•	•	•
V	FPM	•	•	•	•	•	•	•	•

Thermostat

		DEA	DEM	DEU	DLA	DLE	DTA	DTI
A	Without thermostat	•	•	•	•	•	-	•
F	With thermostat	-	•	-	-	•	•	-

Electrical connections

		DEA	DEM	DEU	DLA	DLE	DT
10	Connection AMP Superseal series 1.5	-	•	-	-	-	-
20	Connection AMP Timer Junior	-	•	-	-	-	-
30	Connection Deutsch DT-04-2-P	-	•	-	-	-	-
35	Connection Deutsch DT-04-3-P	-	•	-	-	-	-
50	Connection EN 175301-803	•	-	•	-	•	-
51	Connection EN 175301-803, transparent base with lamps 24 Vdc	-	-	-	•	-	-
52	Connection EN 175301-803, transparent base with lamps 110 Vdc	-	-	-	•	-	-
70	Connection IEC 61076-2-101 D (M12)	-	-	-	-	-	•
71	Connection IEC 61076-2-101 D (M12), black base with lamps 24 Vdc	-	-	-	•	-	-

Option

P01	MP Filtri standard
Pxx	Customized

Certifications

		DEU	OTHERS
	Without	-	•
UL	UL certification	•	-

PLUGS

Configuration example	T2 H

Series

T2	Plug

Seals

H	HNBR
V	FPM

STAINLESS STEEL HIGH PRESSURE FILTERS

Designation & Ordering code

APPLICABLE DIFFERENTIAL PRESSURE INDICATORS BY FILTER SERIES

Filter Series	DEX	DEZ	DLX	DLZ	DVX	DVY	DVZ
FZP	•	-	•	-	•	•	-
FZH	-	•	-	•	-	-	•
FZX	-	-	-	-	-	-	-
FZM	•	-	•	-	•	•	-
FZB	•	-	•	-	•	•	-
FZD	•	-	•	-	•	•	-

DIFFERENTIAL PRESSURE INDICATORS

Configuration example 1: DE | Z | 50 | H | A | 50 | P01

Configuration example 2: DL | X | 70 | V | A | 52 | P01

Series

DE	Electrical differential pressure indicator
DL	Electrical / Visual differential pressure indicator
DV	Visual differential pressure indicator

Type	DE	DL	DV
X Stainless steel standard type 420 bar	•	•	•
Y Stainless steel optional type 420 bar	-	-	•
Z Stainless steel 700 bar (only for FZH)	•	•	•

Pressure setting	DEX	DEZ	DL	DV
50 5.0 bar	•	•	•	•
70 7.0 bar	•	•	•	•
95 9.5 bar	•	•	•	•

Seals	DEX	DEZ	DL	DV
H HNBR	•	•	•	•
V FPM	-	-	•	•
F MFQ	•	-	-	-

Thermostat	DEX	DEZ	DL	DV
A Without thermostat	•	•	•	-

Electrical connections	DEX	DEZ	DL
50 Connection EN 175301-803	•	•	-
51 Connection EN 175301-803, transparent base with lamps 24 Vdc	-	-	•
52 Connection EN 175301-803, transparent base with lamps 110 Vdc	-	-	•

Option

P01	MP Filtri standard
Pxx	Customized

PLUGS

Configuration example: X2 | H

Series

X2	Stainless Steel plug 420 bar
X3	Stainless Steel plug 700 bar (only for FZH)

Seals

H	HNBR
V	FPM
F	MFQ

FILTERS FOR POTENTIALLY EXPLOSIVE ATMOSPHERE

Designation & Ordering code

APPLICABLE DIFFERENTIAL PRESSURE INDICATORS BY FILTER SERIES

Filter Series	DEH	DVA	DVM	DVX	DVY	DVZ
FMMX	•	•	•	-	-	-
FZP	•	-	-	•	•	-
FZH	-	-	-	-	-	•
FZX	-	-	-	-	-	-

DIFFERENTIAL PRESSURE INDICATORS

Configuration example 1: DE | H | 50 | F | A | 48 | P01

Configuration example 2: DV | X | 70 | V | | | P01

Series

DE Electrical differential pressure indicator

DV Visual differential pressure indicator

Type	DE	DV
A With automatic reset	-	•
M With manual reset	-	•
H Stainless steel hazardous area 420 bar	•	-
X Stainless steel standard type 420 bar	-	•
Y Stainless steel optional type 420 bar	-	•
Z Stainless steel standard type 700 bar	-	•

Pressure setting	DEH	DVA	DVM	DVX	DVY
50 5.0 bar	•	•	•	•	•
70 7.0 bar	•	•	•	•	•
95 9.5 bar	-	•	•	•	•

Seals	DEH	DVA	DVM	DVX	DVY
H HNBR	-	•	•	•	•
V FPM	•	•	•	•	•
F MFQ	•	-	-	-	-

Thermostat	DEH
A Without thermostat	•

Electrical connections	DEH
48 Connection via three-core cable - fitting M20x1.5	•
49 Connection via four-core cable - fitting 1/2” NPT	•
70 Connection IEC 61076-2-101 D (M12)	•

Option

P01 MP Filtri standard

Pxx Customized

PLUGS

Configuration example: X2 | H

Series

T2 Plug

X2 Stainless Steel plug 420 bar

X3 Stainless Steel plug 700 bar (only for FZH)

Seals	T2	X2	X3
H HNBR	•	•	•
V FPM	•	•	•
F MFQ	-	•	•

Technical data

VE*50 (EX)

Electrical Vacuum Indicator
Connection: EN 175301-803

R	Ordering code
EN 10226 - R1/4"	VE A 21 x A 50 P01
	VE A 21 x A 50 P01 EX
EN 10226 - R1/8"	VE B 21 A A 50 P01
	VE B 21 A A 50 P01 EX

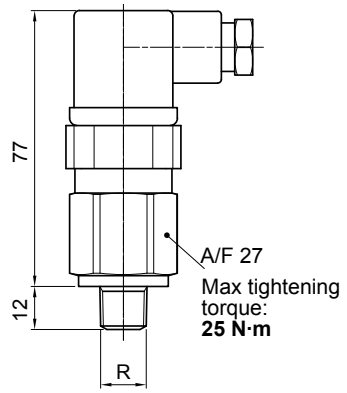

Hydraulic symbol

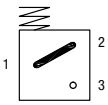

Electrical symbol

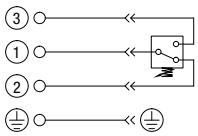

- Certification: ATEX, IECEx
- Certification included in EX version

Materials
- Body: Brass
- Base: Black polyamide
- Contacts: Silver
- Seal: VEA: NBR/FPM
  VEB: NBR

Technical data
- Vacuum setting: 0.21 bar ±10%
- Max working pressure: 10 bar
- Proof pressure: 15 bar
- Working temperature: From -25 °C to +80 °C
- Compatibility with fluids: Mineral oils, Synthetic fluids
  HFB and HFC according to ISO 2943
- Degree of protection: IP65 according to EN 60529

Electrical data
- Electrical connection: EN 175301-803
- Resistive load: 5 A / 14 Vdc
  4 A / 30 Vdc
  5 A / 125 Vac
  4 A / 250 Vac

VEA50 UL

Electrical Vacuum Indicator
Connection: EN 175301-803

R	Ordering code
EN 10226 - R1/4"	VE A 21 A A 50 P01 UL

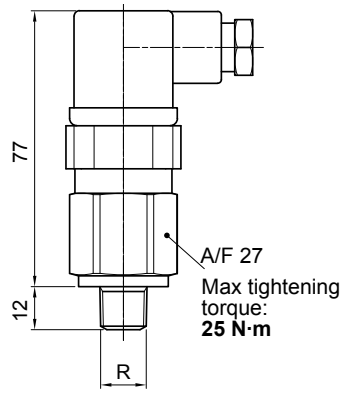

Hydraulic symbol

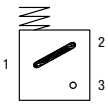

Electrical symbol

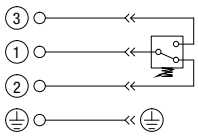

- Certification: UL
- Certification included as standard

Materials
- Body: Brass
- Base: Black polyamide
- Contacts: Silver
- Seal: VEA: NBR/FPM
  VEB: NBR

Technical data
- Vacuum setting: 0.21 bar ±10%
- Max working pressure: 10 bar
- Proof pressure: 15 bar
- Working temperature: From -25 °C to +80 °C
- Compatibility with fluids: Mineral oils, Synthetic fluids
  HFB and HFC according to ISO 2943
- Degree of protection: IP65 according to EN 60529

Electrical data
- Electrical connection: EN 175301-803
- Resistive load: 5 A / 14 Vdc
  4 A / 30 Vdc
  5 A / 125 Vac
  4 A / 250 Vac

VL*51 - VL*52 - VL*53

Electrical/Visual Vacuum Indicator
Connection: EN 175301-803

51: Transparent base with lamps 24 Vdc
52: Transparent base with lamps 110 Vdc
53: Transparent base with lamps 230 Vac

R	Ordering code
EN 10226 - R1/4"	VL A 21 x A xx P01
EN 10226 - R1/8"	VL B 21 A A xx P01

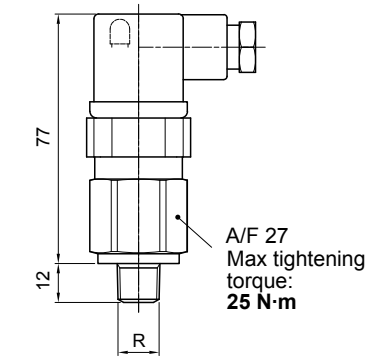

Hydraulic symbol

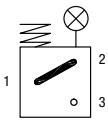

Electrical symbol

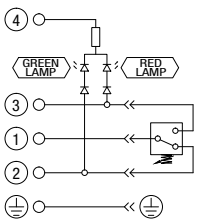

Materials
- Body: Brass
- Base: Transparent polyamide
- Contacts: Brass - Polyamide
- Seal: VLA: NBR/FPM
  VLB: NBR

Technical data
- Vacuum setting: 0.21 bar ±10%
- Max working pressure: 10 bar
- Proof pressure: 15 bar
- Working temperature: From -25 °C to +80 °C
- Compatibility with fluids: Mineral oils, Synthetic fluids
  HFB and HFC according to ISO 2943
- Degree of protection: IP65 according to EN 60529

Electrical data
- Electrical connection: EN 175301-803

- Type	51	52	53
- Lamps	24 Vdc	110 Vdc	230 Vac
- Resistive load:	1 A / 24 Vdc	1 A / 110 Vdc	1 A / 230 Vac

VL*71

Electrical/Visual Vacuum Indicator
Connection IEC 61076-2-101 D (M12), black base with lamps 24 Vdc

Connections	Indicator code
EN 10226 - R1/4"	VL A 21 x A 71 P01
EN 10226 - R1/8"	VL B 21 A A 71 P01

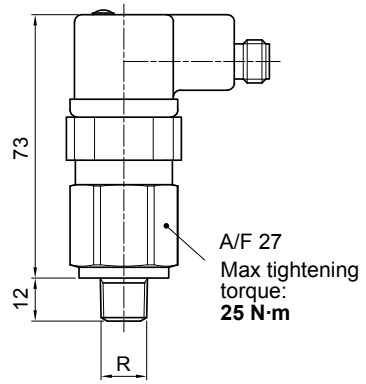

Hydraulic symbol

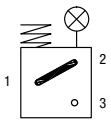

Electrical symbol

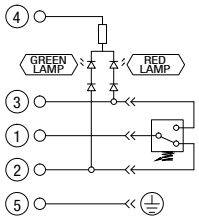

Materials
- Body: Brass
- Base: Black polyamide
- Contacts: Silver
- Seal: VLA: NBR/FPM; VLB: NBR

Technical data
- Vacuum setting: 0.21 bar ±10%
- Max working pressure: 10 bar
- Proof pressure: 15 bar
- Working temperature: From -25 °C to +80 °C
- Compatibility with fluids: Mineral oils, Synthetic fluids HFB and HFC according to ISO 2943
- Degree of protection: IP65 according to EN 60529

Electrical data
- Electrical connection: IEC 61076-2-101 D (M12)
- Lamps: 24 Vdc (black base)
- Resistive load: 0.4 A / 24 Vdc

VVA - VVB

Axial Vacuum Gauge

R	Ordering code
EN 10226 - R1/4"	VVA 20 P01
EN 10226 - R1/8"	VVB 20 P01

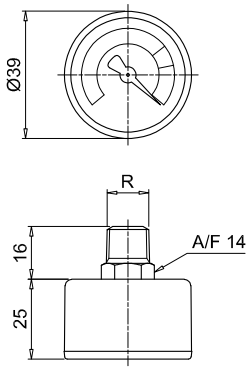

Hydraulic symbol



Dial scale

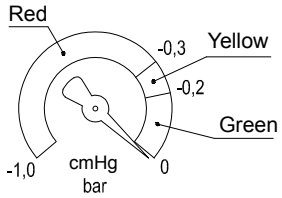

Conversion to SI units

[cmHg]	[bar]
-12	-0.16
-18	-0.24
-76	-1.01

Materials
- Case: Black plastic
- Window: Clear plastic
- Dial: White plastic
- Pointer: Black plastic
- Pressure connection: Cu-alloy
- Pressure element: Bourdon tube Cu-alloy soft soldered, C type
- Movement: Cu-alloy

Technical data
- Max working pressure: Steady: -0.7 bar; Fluctuating: -0.6 bar; Short time: -1.0 bar
- Working temperature: Ambienti from -40 °C to +60 °C; Fluid max + 60 °C; Storage from -40 °C to +60 °C
- Compatibility with fluids: Mineral oils, Synthetic fluids HFB and HFC according to ISO 2943
- Accuracy: Class 2.5 according to EN 13190
- Degree of protection: IP31 according to EN 60529

VVR - VVS

Radial Vacuum Gauge

R	A/F	Ordering code
EN 10226 - R1/4"	14	VVR 20 P01
EN 10226 - R1/8"	11	VVS 20 P01

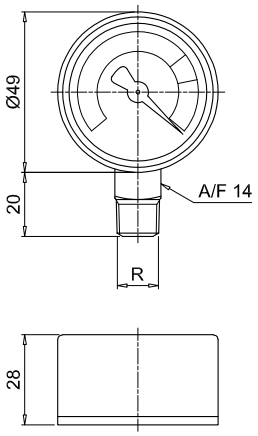

Hydraulic symbol



Dial scale

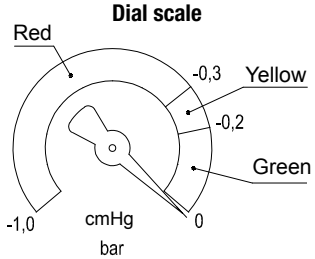

Conversion to SI units

[cmHg]	[bar]
-12	-0.16
-18	-0.24
-76	-1.01

Materials
- Case: Black plastic
- Window: Clear plastic
- Dial: White plastic
- Pointer: Black plastic
- Pressure connection: Cu-alloy
- Pressure element: Bourdon tube Cu-alloy soft soldered, C type
- Movement: Cu-alloy

Technical data
- Max working pressure: Steady: -0.7 bar; Fluctuating: -0.6 bar; Short time: -1.0 bar
- Working temperature: Ambienti from -40 °C to +60 °C; Fluid max + 60 °C; Storage from -40 °C to +60 °C
- Compatibility with fluids: Mineral oils, Synthetic fluids HFB and HFC according to ISO 2943
- Accuracy: Class 2.5 according to EN 13190
- Degree of protection: IP31 according to EN 60529

Dimensions

BEA*50 (EX)

Electrical Pressure Indicator
Connection EN 175301-803

Settings	Ordering code
1.5 bar ±10%	BE A 15 H A 50 P01
	BE A 15 H A 50 P01 EX
2.0 bar ±10%	BE A 20 H A 50 P01
	BE A 20 H A 50 P01 EX

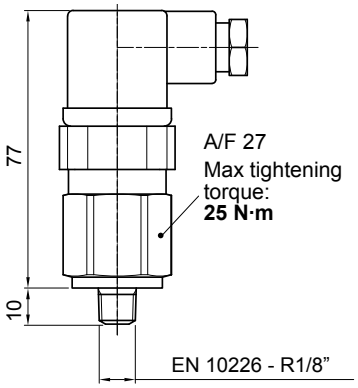

Hydraulic symbol

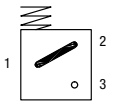

Electrical symbol

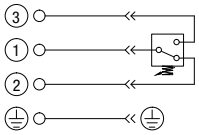

- Certification: ATEX, IECEx
- Certification included in EX version

Materials
- Body: Brass
- Base: Black polyamide
- Contacts: Silver
- Seal: HNBR

Technical data
- Max working pressure: 40 bar
- Proof pressure: 60 bar
- Working temperature: From -25 °C to +80 °C
- Compatibility with fluids: Mineral oils, Synthetic fluids HFB and HFC according to ISO 2943
- Degree of protection: IP65 according to EN 60529

Electrical data
- Electrical connection: EN 175301-803
- Resistive load: 5 A / 14 Vdc
  4 A / 30 Vdc
  5 A / 125 Vac
  4 A / 250 Vac

BEA*50 UL

Electrical Pressure Indicator
Connection EN 175301-803

Settings	Ordering code
1.5 bar ±10%	BE A 15 H A 50 P01 UL
2.0 bar ±10%	BE A 20 H A 50 P01 UL

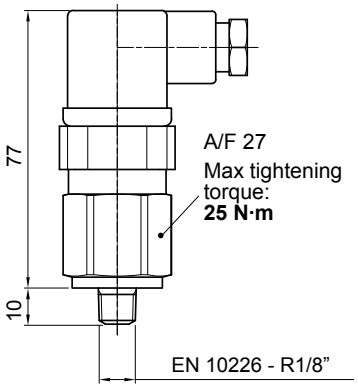

Hydraulic symbol

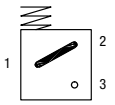

Electrical symbol

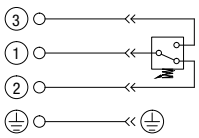

- Certification: UL
- Certification included as standard

Materials
- Body: Brass
- Base: Black polyamide
- Contacts: Silver
- Seal: HNBR

Technical data
- Max working pressure: 12 bar
- Proof pressure: 40 bar
- Working temperature: From -25 °C to +80 °C
- Compatibility with fluids: Mineral oils, Synthetic fluids HFB and HFC according to ISO 2943
- Degree of protection: IP65 according to EN 60529

Electrical data
- Electrical connection: EN 175301-803
- Resistive load: 5 A / 14 Vdc
  4 A / 30 Vdc
  5 A / 125 Vac
  4 A / 250 Vac

BEM*41

Electrical Pressure Indicator
Connection via four-core cable

Settings	Ordering code
1.5 bar ±10%	BE M 15 H A 41 P01
2.0 bar ±10%	BE M 20 H A 41 P01

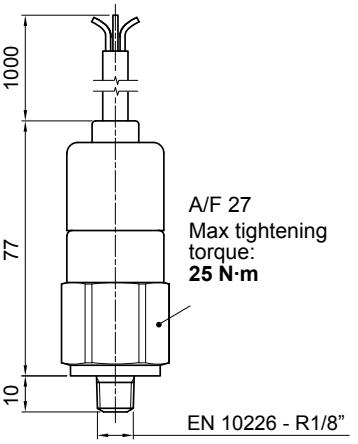

Hydraulic symbol

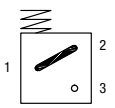

Electrical symbol

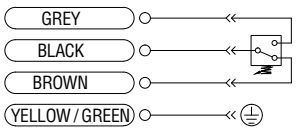

Materials
- Body: Brass
- Base: Black polyamide
- Contacts: Silver
- Seal: HNBR

Technical data
- Max working pressure: 40 bar
- Proof pressure: 60 bar
- Working temperature: From -25 °C to +80 °C
- Compatibility with fluids: Mineral oils, Synthetic fluids HFB and HFC according to ISO 2943
- Degree of protection: IP67 according to EN 60529

Electrical data
- Electrical connection: Four-core cable
- Resistive load: 5 A / 14 Vdc
  4 A / 30 Vdc
  5 A / 125 Vac
  4 A / 250 Vac
- CE certification

On request this indicator can be provided with main connectors in use for wirings.

BET*F10

Electrical Pressure Indicator
Connection AMP Superseal series 1.5

Settings	Ordering code
2.0 bar ±10%	BE T 20 H F 10 P01
2.5 bar ±10%	BE T 25 H F 10 P01

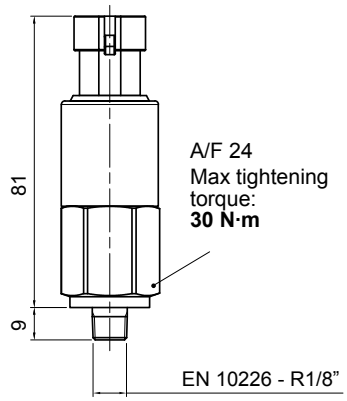

Hydraulic symbol

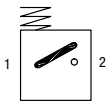

Electrical symbol

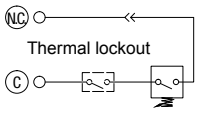

Materials
- Body: Brass
- Base: Black polyamide
- Contacts: Silver
- Seal: HNBR

Technical data
- Max working pressure: 10 bar
- Proof pressure: 15 bar
- Working temperature: From -25 °C to +100 °C
- Compatibility with fluids: Mineral oils, Synthetic fluids HFB and HFC according to ISO 2943
- Degree of protection: IP65 according to EN 60529

Electrical data
- Electrical connection: AMP Superseal series 1.5
- Resistive load: 0.5 A / 48 Vdc
- Thermostat condition: Open up to 30 °C
- CE certification

BET*F30

Electrical Pressure Indicator
Deutsch DT-04-2-P

Settings	Ordering code
2.0 bar ±10%	BE T 20 H F 30 P01
2.5 bar ±10%	BE T 25 H F 30 P01

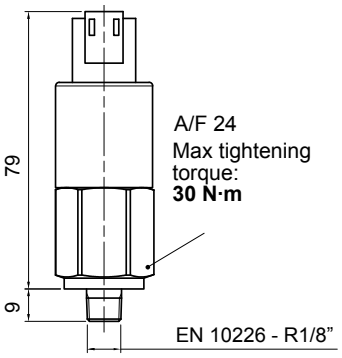

Hydraulic symbol

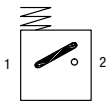

Electrical symbol

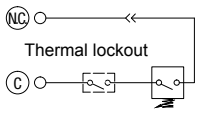

Materials
- Body: Brass
- Base: Black polyamide
- Contacts: Silver
- Seal: HNBR

Technical data
- Max working pressure: 10 bar
- Proof pressure: 15 bar
- Working temperature: From -25 °C to +100 °C
- Compatibility with fluids: Mineral oils, Synthetic fluids HFB and HFC according to ISO 2943
- Degree of protection: IP65 according to EN 60529

Electrical data
- Electrical connection: Deutsch DT-04-2-P
- Resistive load: 0.5 A / 48 Vdc
- Thermostat condition: Open up to 30 °C
- CE certification

BET*F50

Electrical Pressure Indicator
Connection EN 175301-803

Settings	Ordering code
2.0 bar ±10%	BE T 20 H F 50 P01
2.5 bar ±10%	BE T 25 H F 50 P01

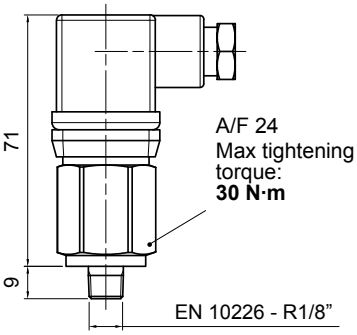

Hydraulic symbol

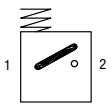

Electrical symbol

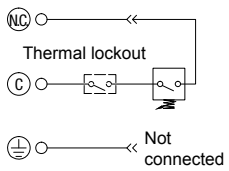

Materials
- Body: Brass
- Base: Black polyamide
- Contacts: Silver
- Seal: HNBR

Technical data
- Max working pressure: 10 bar
- Proof pressure: 15 bar
- Working temperature: From -25 °C to +100 °C
- Compatibility with fluids: Mineral oils, Synthetic fluids HFB and HFC according to ISO 2943
- Degree of protection: IP65 according to EN 60529

Electrical data
- Electrical connection: EN 175301-803
- Resistive load: 0.5 A / 48 Vdc
- Thermostat condition: Open up to 30 °C
- CE certification

Dimensions

BL*51 - BL*52 - BL*53

Electrical/Visual Pressure Indicator
Connection: EN 175301-803

51: Transparent base with lamps 24 Vdc
52: Transparent base with lamps 110 Vdc
53: Transparent base with lamps 230 Vac

Settings	Ordering code
1.5 bar ±10%	BL A 15 H A xx P01
2.0 bar ±10%	BL A 20 H A xx P01

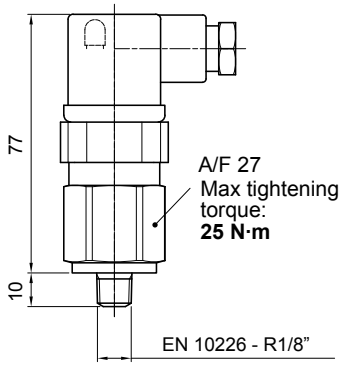

Hydraulic symbol

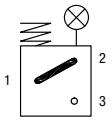

Electrical symbol

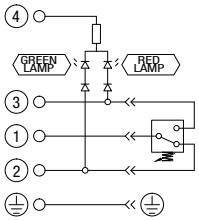

Materials
- Body: Brass
- Base: Transparent polyamide
- Contacts: Silver
- Seal: HNBR

Technical data
- Max working pressure: 40 bar
- Proof pressure: 60 bar
- Working temperature: From -25 °C to +80 °C
- Compatibility with fluids: Mineral oils, Synthetic fluids HFB and HFC according to ISO 2943
- Degree of protection: IP65 according to EN 60529

Electrical data

- Electrical connection:	EN 175301-803		
- Type	51	52	53
- Lamps	24 Vdc	110 Vdc	230 Vac
- Resistive load:	1 A / 24 Vdc	1 A / 110 Vdc	1 A / 230 Vac

BL*71

Electrical/Visual Pressure Indicator
Connection IEC 61076-2-101 D (M12), black base with lamps 24 Vdc

Settings	Ordering code
1.5 bar ±10%	BL A 15 H A 71 P01
2.0 bar ±10%	BL A 20 H A 71 P01

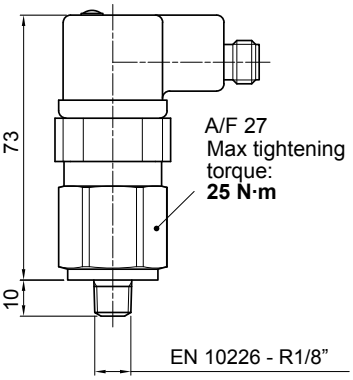

Hydraulic symbol

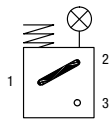

Electrical symbol

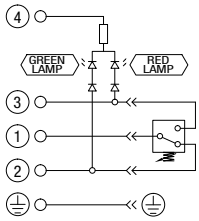

Materials
- Body: Brass
- Base: Black polyamide
- Contacts: Silver
- Seal: HNBR

Technical data
- Max working pressure: 40 bar
- Proof pressure: 60 bar
- Working temperature: From -25 °C to +80 °C
- Compatibility with fluids: Mineral oils, Synthetic fluids HFB and HFC according to ISO 2943
- Degree of protection: IP65 according to EN 60529

Electrical data
- Electrical connection: IEC 61076-2-101 D (M12)
- Lamps: 24 Vdc (black base)
- Resistive load: 0.4 A / 24 Vdc

BVA

Axial Pressure Gauge

Settings	Ordering code
1.4 bar ±10%	BV A 14 P01
2.5 bar ±10%	BV A 25 P01

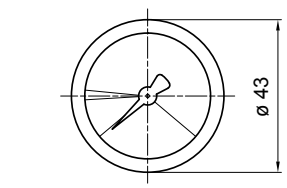

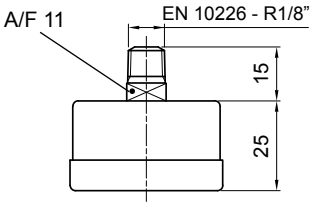

Hydraulic symbol



Dial scale

BV A 14 P01

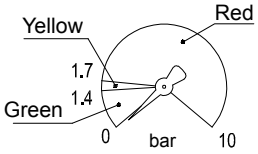

BV A 25 P01

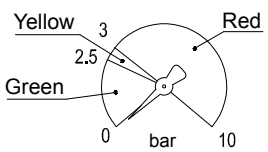

Materials
- Case: Painted Steel
- Window: Clear plastic
- Dial: Painted Steel
- Pointer: Black plastic
- Pressure connection: Brass
- Pressure element: Bourdon tube Cu-alloy sof t soldered, C type
- Movement: Cu-alloy

Technical data
- Max working pressure: Static: 7 bar
  Fluctuating: 6 bar
  Short time: 10 bar
- Working temperature: Ambient from -40 °C to +60 °C
  Fluid max +60 °C
  Storage from -40 °C to +60 °C
- Compatibility with fluids: Mineral oils, Synthetic fluids HFB and HFC according to ISO 2943
- Accuracy: Class 2.5 according to EN 13190
- Degree of protection: IP31 according to EN 60529

BVR

Radial Pressure Gauge

Settings	Ordering code
1.4 bar ±10%	BV R 14 P01
2.5 bar ±10%	BV R 25 P01

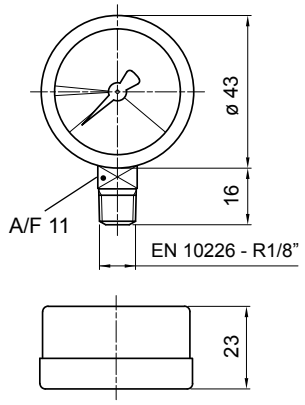

Hydraulic symbol



Dial scale

BV R 14 P01

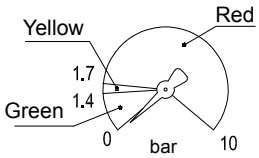

BV R 25 P01

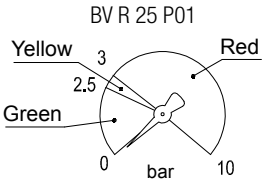

Materials

- Case:	Painted Steel
- Window:	Clear plastic
- Dial:	Painted Steel
- Pointer:	Black plastic
- Pressure connection:	Brass
- Pressure element:	Bourdon tube Cu-alloy sof t soldered, C type
- Movement:	Cu-alloy

Technical data

- Max working pressure:	Static: 7 bar Fluctuating: 6 bar Short time: 10 bar
- Working temperature:	Ambient from -40 °C to +60 °C Fluid max +60 °C Storage from -40 °C to +60 °C
- Compatibility with fluids:	Mineral oils, Synthetic fluids HFB and HFC according to ISO 2943
- Accuracy:	Class 2.5 according to EN 13190
- Degree of protection:	IP31 according to EN 60529

BVP - BVQ

Visual Pressure Indicator
BVP - Automatic reset
BVQ - Manual reset

Setting	Ordering code
1.5 bar ±10%	BV P 15 H P01
	BV Q 15 H P01
2.0 bar ±10%	BV P 20 H P01
	BV Q 20 H P01

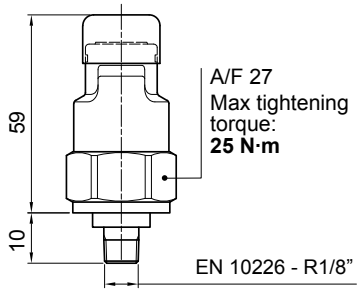

Hydraulic symbol

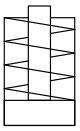

Materials

- Body:	Brass
- Cover / internal parts:	Polyamide
- Caps:	VMQ
- Seal:	HNBR

Technical data

- Reset:	BVP - Automatic reset BVQ - Manual reset
- Max working pressure:	10 bar
- Proof pressure:	15 bar
- Working temperature:	From -25 °C to +80 °C
- Compatibility with fluids:	Mineral oils, Synthetic fluids HFB and HFC according to ISO 2943
- Degree of protection:	IP45 according to EN 60529

Signals

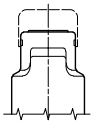

Absence of pressure
(no indicator)

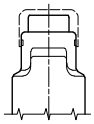

Presence of pressure
(green button rises gradually)

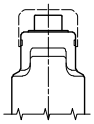

Clogged filter element
(red button risen)

Dimensions

DEA*50

Electrical Differential Pressure Indicator
Connection: EN 175301-803

Settings	Ordering code
1.2 bar ±10%	DE A 12 x A 50 P01
2.0 bar ±10%	DE A 20 x A 50 P01
5.0 bar ±10%	DE A 50 x A 50 P01
7.0 bar ±10%	DE A 70 x A 50 P01
9.5 bar ±10%	DE A 95 x A 50 P01

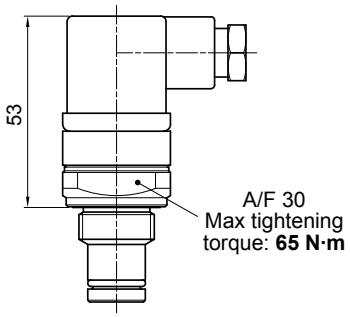

Hydraulic symbol

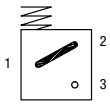

Electrical symbol

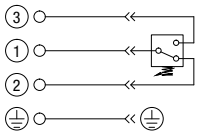

Materials
- Body: Brass
- Base: Black polyamide
- Contacts: Silver
- Seal: HNBR - FPM

Technical data
- Max working pressure: 420 bar
- Proof pressure: 630 bar
- Burst pressure: 1260 bar
- Working temperature: From -25 °C to +110 °C
- Compatibility with fluids: Mineral oils, Synthetic fluids HFB and HFC according to ISO 2943
- Degree protection: IP66 according to EN 60529 IP69K according to ISO 20653

Electrical data
- Electrical connection: EN 175301-803
- Resistive load: 0.2 A / 115 Vdc

DEH*48

Hazardous Area
Electrical Differential Pressure Indicator
Connection via three-core cable - cable fitting M20x1.5

Settings	Ordering code
2.0 bar ±10%	DE H 20 x A 48 P01
5.0 bar ±10%	DE H 50 x A 48 P01
7.0 bar ±10%	DE H 70 x A 48 P01

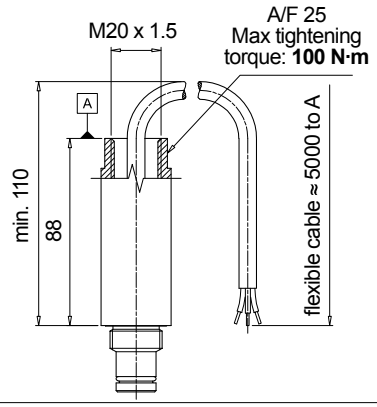

Hydraulic symbol



Electrical symbol

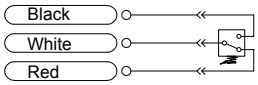

- Certification / Approvals: ATEX, IECEx, EAC TR CU
- Certification included as standard

Materials
- Body: AISI 316L
- Contacts: Rhodium
- Seal: FPM - MFQ

Technical data
- Max working pressure: 420 bar
- Proof pressure: 630 bar
- Burst pressure: 1260 bar
- Compatibility with fluids: Mineral oils, Synthetic fluids HFB and HFC according to ISO 2943
- Temperature range: T4=Tamb -60 °C to +125 °C (-76 to 257 °F) T6=Tamb -60 °C to +80 °C (-76 to 176 °F)
- Degree of protection: IP 66/67/68 according to EN 60529
- Connection type: Three-core cable, fitting M20x1.5
- Contact type: SPCO/SPDT (Hermetically sealed - Volt-free contacts)

Electrical data
- Resistive Load: 830 mA / 24 Vdc - 180 mA / 110 Vac
- Electrical Ratings: Ui = 30 Vdc / Ii = 250 mA / Pi = 1.3 W

Atex Rating
II 1 GD Ex ia IIC T6 Ga
Ex ia IIC T4 Ga
Ex ia IIIC T_{200} 85 °C Da
Ex ia IIIC T_{200} 135 °C Da

IECEx Rating
Ex ia IIC T6 Ga
Ex ia IIC T4 Ga
Ex ia IIIC T_{200} 85 °C Da
Ex ia IIIC T_{200} 135 °C Da

DEH*49

Hazardous Area
Electrical Differential Pressure Indicator
Connection via four-core cable - cable fitting 1/2" NPT

Settings	Ordering code
2.0 bar ±10%	DE H 20 x A 49 P01
5.0 bar ±10%	DE H 50 x A 49 P01
7.0 bar ±10%	DE H 70 x A 49 P01

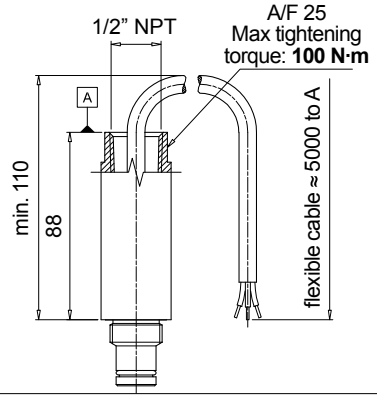

Hydraulic symbol



Electrical symbol

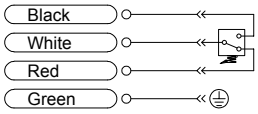

- Certification / Approvals: ATEX, IECEx, EAC TR CU, UL/CSA
- Certification included as standard

Materials
- Body: AISI 316L
- Contacts: Rhodium
- Seal: FPM - MFQ

Technical data
- Max working pressure: 420 bar
- Proof pressure: 630 bar
- Burst pressure: 1260 bar
- Compatibility with fluids: Mineral oils, Synthetic fluids HFB and HFC according to ISO 2943
- Temperature range: T4=Tamb -60 °C to +120 °C (-76 to 248 °F) T6=Tamb -60 °C to +70 °C (-76 to 158 °F) From -60 °C to +105 °C (-76 to 221 °F) : UL/CSA
- Degree of protection: IP 66/67/68 according to EN 60529
- Connection type: Four-core cable, fitting 1/2" NPT
- Contact type: SPCO/SPDT (Hermetically sealed - Volt-free contacts)

Electrical data
- Resistive Load: 830 mA / 24 Vdc - 180 mA / 110 Vac
- Electrical Ratings: Ui = 150 Vac/dc / Pi = 20 W

Atex Rating
II 2 GD Ex db IIC T6 Gb
Ex db IIC T4 Gb
Ex tb IIIC T85 °C Db
Ex tb IIIC T135 °C Db

IECEx Rating
Ex db IIC T6 Gb
Ex db IIC T4 Gb
Ex tb IIIC T85 °C Db
Ex tb IIIC T135 °C Db

UL/CSA Rating
Class I Div 1 Groups A, B, C, & D
Class II Div 1 Groups E, F, & G
Class III Hazardous Locations

DEH*70

Hazardous Area
Electrical Differential Pressure Indicator
Connection IEC 61076-2-101 D (M12)

Settings	Ordering code
2.0 bar ±10%	DE H 20 x A 70 P01
5.0 bar ±10%	DE H 50 x A 70 P01
7.0 bar ±10%	DE H 70 x A 70 P01

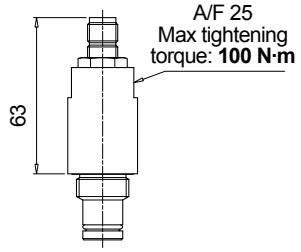

Hydraulic symbol



Electrical symbol

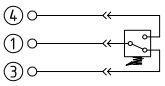

- Certification / Approvals: ATEX, IECEx, EAC TR CU
- Certification included as standard

Materials
- Body: AISI 316L with internal engineered resin switch
- Contacts: Rhodium
- Seal: FPM - MFQ

Technical data
- Max working pressure: 420 bar
- Proof pressure: 630 bar
- Burst pressure: 1260 bar
- Compatibility with fluids: Mineral oils, Synthetic fluids HFB and HFC according to ISO 2943
- Temperature range: T6=Tamb -60 °C to +80 °C (-76 to 176 °F)
- Degree of protection: IP 66/67 according to EN 60529
- Connection type: IEC 61076-2-101 D (M12)
- Contact type: SPCO/SPDT (Hermetically sealed - Volt-free contacts)

Electrical data
- Resistive Load: 830 mA / 24 Vdc - 180 mA / 110 Vdc
- Electrical Ratings: Ui = 30 Vdc / Ii = 250 mA / Pi = 1.3 W

Atex Rating
II 1 GD Ex ia IIC T6 Ga
Ex ia IIIC T_{200} 135 °C Da

IECEx Rating
Ex ia IIC T6 Ga
Ex ia IIIC T_{200} 135 °C Da

DEM*F10

Electrical Differential Pressure Indicator
Connection: AMP Superseal series 1.5

Settings	Ordering code
1.2 bar ±10%	DE M 12 x F 10 P01
2.0 bar ±10%	DE M 20 x F 10 P01
5.0 bar ±10%	DE M 50 x F 10 P01
7.0 bar ±10%	DE M 70 x F 10 P01
9.5 bar ±10%	DE M 95 x F 10 P01

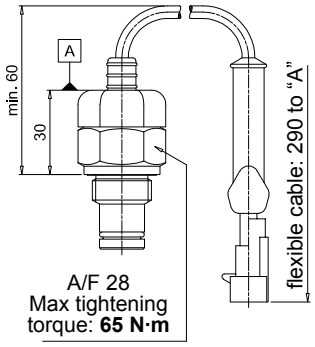

Hydraulic symbol

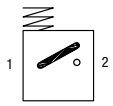

Electrical symbol

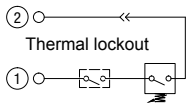

Materials
- Body: Brass
- Base: Black polyamide
- Contacts: Silver
- Seal: HNBR - FPM

Technical data
- Max working pressure: 420 bar
- Proof pressure: 630 bar
- Burst pressure: 1260 bar
- Working temperature: From -25 °C to +110 °C
- Compatibility with fluids: Mineral oils, Synthetic fluids HFB and HFC according to ISO 2943
- Degree protection: IP66 according to EN 60529

Electrical data
- Electrical connection: AMP Superseal series 1.5
- Resistive load: 0.2 A / 115 Vdc
- Switching type: Normally open contacts (NC on request)
- Thermal lockout: Normally open up to 30 °C (option "F")

DEM*F20

Electrical Differential Pressure Indicator
AMP Time junior

Settings	Ordering code
1.2 bar ±10%	DE M 12 x F 20 P01
2.0 bar ±10%	DE M 20 x F 20 P01
5.0 bar ±10%	DE M 50 x F 20 P01
7.0 bar ±10%	DE M 70 x F 20 P01
9.5 bar ±10%	DE M 95 x F 20 P01

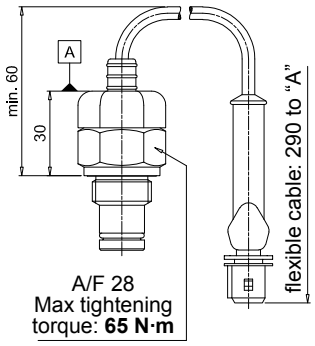

Hydraulic symbol

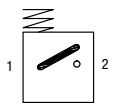

Electrical symbol

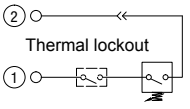

Materials
- Body: Brass
- Base: Black polyamide
- Contacts: Silver
- Seal: HNBR - FPM

Technical data
- Max working pressure: 420 bar
- Proof pressure: 630 bar
- Burst pressure: 1260 bar
- Working temperature: From -25 °C to +110 °C
- Compatibility with fluids: Mineral oils, Synthetic fluids HFB and HFC according to ISO 2943
- Degree protection: IP66 according to EN 60529

Electrical data
- Electrical connection: AMP Time junior
- Resistive load: 0.2 A / 115 Vdc
- Switching type: Normally open contacts (NC on request)
- Thermal lockout: Normally open up to 30 °C (option "F")

Dimensions

DEM*F30

Electrical Differential Pressure Indicator
Deutsch DT-04-2-P

Settings	Ordering code
1.2 bar ±10%	DE M 12 x F 30 P01
2.0 bar ±10%	DE M 20 x F 30 P01
5.0 bar ±10%	DE M 50 x F 30 P01
7.0 bar ±10%	DE M 70 x F 30 P01
9.5 bar ±10%	DE M 95 x F 30 P01

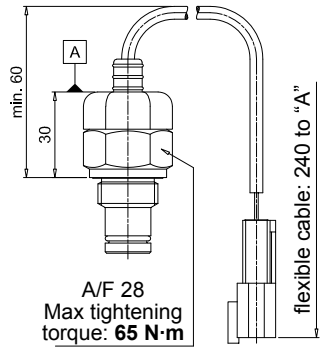

Hydraulic symbol

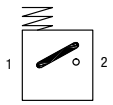

Electrical symbol

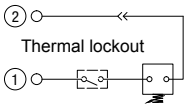

Materials
- Body: Brass
- Base: Black polyamide
- Contacts: Silver
- Seal: HNBR - FPM

Technical data
- Max working pressure: 420 bar
- Proof pressure: 630 bar
- Burst pressure: 1260 bar
- Working temperature: From -25 °C to +110 °C
- Compatibility with fluids: Mineral oils, Synthetic fluids HFB and HFC according to ISO 2943
- Degree protection: IP66 according to EN 60529

Electrical data
- Electrical connection: Deutsch DT-04-2-P
- Resistive load: 0.2 A / 115 Vdc
- Switching type: Normally open contacts (NC on request)
- Thermal lockout: Normally open up to 30 °C (option "F")

DEM*F35

Electrical Differential Pressure Indicator
Deutsch DT-04-3-P

Settings	Ordering code
1.2 bar ±10%	DE M 12 x F 35 P01
2.0 bar ±10%	DE M 20 x F 35 P01
5.0 bar ±10%	DE M 50 x F 35 P01
7.0 bar ±10%	DE M 70 x F 35 P01
9.5 bar ±10%	DE M 95 x F 35 P01

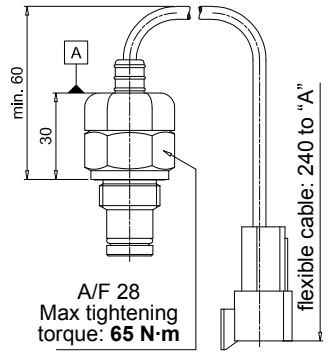

Hydraulic symbol

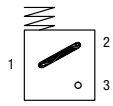

Electrical symbol

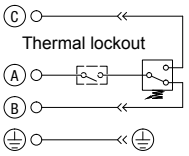

Materials
- Body: Brass
- Base: Black polyamide
- Contacts: Silver
- Seal: HNBR - FPM

Technical data
- Max working pressure: 420 bar
- Proof pressure: 630 bar
- Burst pressure: 1260 bar
- Working temperature: From -25 °C to +110 °C
- Compatibility with fluids: Mineral oils, Synthetic fluids HFB and HFC according to ISO 2943
- Degree protection: IP66 according to EN 60529

Electrical data
- Electrical connection: Deutsch DT-04-3-P
- Resistive load: 0.2 A / 115 Vdc
- Switching type: SPDT contact
- Thermal lockout: Normally open up to 30 °C (option "F")

DEM*A10

Electrical Differential Pressure Indicator
Connection: AMP Superseal series 1.5

Settings	Ordering code
1.2 bar ±10%	DE M 12 x A 10 P01
2.0 bar ±10%	DE M 20 x A 10 P01
5.0 bar ±10%	DE M 50 x A 10 P01
7.0 bar ±10%	DE M 70 x A 10 P01
9.5 bar ±10%	DE M 95 x A 10 P01

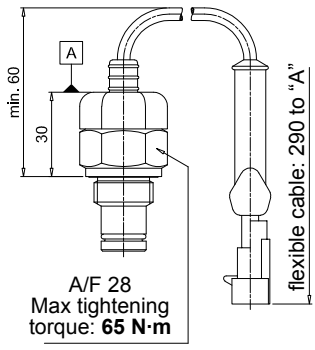

Hydraulic symbol

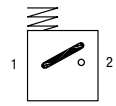

Electrical symbol

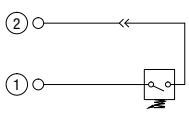

Materials
- Body: Brass
- Base: Black polyamide
- Contacts: Silver
- Seal: HNBR - FPM

Technical data
- Max working pressure: 420 bar
- Proof pressure: 630 bar
- Burst pressure: 1260 bar
- Working temperature: From -25 °C to +110 °C
- Compatibility with fluids: Mineral oils, Synthetic fluids HFB and HFC according to ISO 2943
- Degree protection: IP66 according to EN 60529

Electrical data
- Electrical connection: AMP Superseal series 1.5
- Resistive load: 0.2 A / 115 Vdc
- Switching type: Normally open contacts (NC on request)

DEM*A20

Electrical Differential Pressure Indicator
AMP Time junior

Settings	Ordering code
1.2 bar ±10%	DE M 12 x A 20 P01
2.0 bar ±10%	DE M 20 x A 20 P01
5.0 bar ±10%	DE M 50 x A 20 P01
7.0 bar ±10%	DE M 70 x A 20 P01
9.5 bar ±10%	DE M 95 x A 20 P01

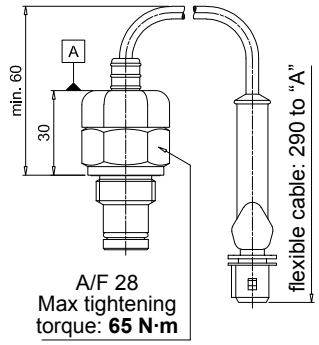

Hydraulic symbol

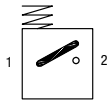

Electrical symbol

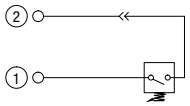

Materials
- Body: Brass
- Base: Black polyamide
- Contacts: Silver
- Seal: HNBR - FPM

Technical data
- Max working pressure: 420 bar
- Proof pressure: 630 bar
- Burst pressure: 1260 bar
- Working temperature: From -25 °C to +110 °C
- Compatibility with fluids: Mineral oils, Synthetic fluids HFB and HFC according to ISO 2943
- Degree protection: IP66 according to EN 60529

Electrical data
- Electrical connection: AMP Time junior
- Resistive load: 0.2 A / 115 Vdc
- Switching type: Normally open contacts (NC on request)

DEM*A30

Electrical Differential Pressure Indicator
Deutsch DT-04-2-P

Settings	Ordering code
1.2 bar ±10%	DE M 12 x A 30 P01
2.0 bar ±10%	DE M 20 x A 30 P01
5.0 bar ±10%	DE M 50 x A 30 P01
7.0 bar ±10%	DE M 70 x A 30 P01
9.5 bar ±10%	DE M 95 x A 30 P01

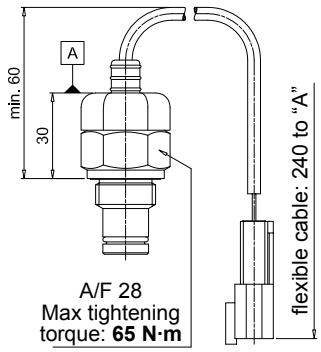

Hydraulic symbol

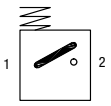

Electrical symbol

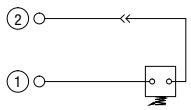

Materials
- Body: Brass
- Base: Black polyamide
- Contacts: Silver
- Seal: HNBR - FPM

Technical data
- Max working pressure: 420 bar
- Proof pressure: 630 bar
- Burst pressure: 1260 bar
- Working temperature: From -25 °C to +110 °C
- Compatibility with fluids: Mineral oils, Synthetic fluids HFB and HFC according to ISO 2943
- Degree protection: IP66 according to EN 60529

Electrical data
- Electrical connection: Deutsch DT-04-2-P
- Resistive load: 0.2 A / 115 Vdc
- Switching type: Normally open contacts (NC on request)

DEM*A35

Electrical Differential Pressure Indicator
Deutsch DT-04-3-P

Settings	Ordering code
1.2 bar ±10%	DE M 12 x A 35 P01
2.0 bar ±10%	DE M 20 x A 35 P01
5.0 bar ±10%	DE M 50 x A 35 P01
7.0 bar ±10%	DE M 70 x A 35 P01
9.5 bar ±10%	DE M 95 x A 35 P01

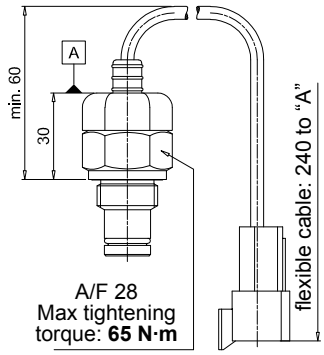

Hydraulic symbol

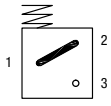

Electrical symbol

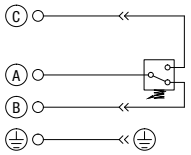

Materials
- Body: Brass
- Base: Black polyamide
- Contacts: Silver
- Seal: HNBR - FPM

Technical data
- Max working pressure: 420 bar
- Proof pressure: 630 bar
- Burst pressure: 1260 bar
- Working temperature: From -25 °C to +110 °C
- Compatibility with fluids: Mineral oils, Synthetic fluids HFB and HFC according to ISO 2943
- Degree protection: IP66 according to EN 60529

Electrical data
- Electrical connection: Deutsch DT-04-3-P
- Resistive load: 0.2 A / 115 Vdc
- Switching type: SPDT contact

Dimensions

DES*10

Electrical Differential Pressure Indicator
AMP Superseal series 1.5

Settings	Ordering code
1.2 bar ±10%	DE S 12 H A 10 P01
2.5 bar ±10%	DE S 25 H A 10 P01
4.0 bar ±10%	DE S 40 H A 10 P01

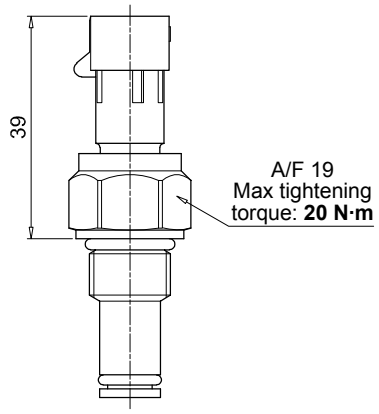

Hydraulic symbol

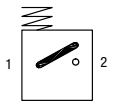

Electrical symbol

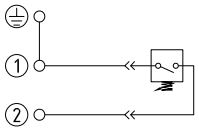

Materials
- Body: Brass
- Internal parts: Brass - Polyamide
- Contacts: Silver
- Seal: HNBR

Technical data
- Max working pressure: 16 bar
- Proof pressure: 24 bar
- Burst pressure: 48 bar
- Working temperature: From -25 °C to +110 °C
- Compatibility with fluids: Mineral oils, Synthetic fluids HFB and HFC according to ISO 2943
- Degree protection: IP67 according to EN 60529

Electrical data
- Electrical connection: AMP Superseal series 1.5
- Resistive load: 0.2 A / 24 Vdc
- Switching type: Normally open contacts (NC on request)

DES*30

Electrical Differential Pressure Indicator
Deutsch DT-04-2-P

Settings	Ordering code
1.2 bar ±10%	DE S 12 H A 30 P01
2.5 bar ±10%	DE S 25 H A 30 P01
4.0 bar ±10%	DE S 40 H A 30 P01

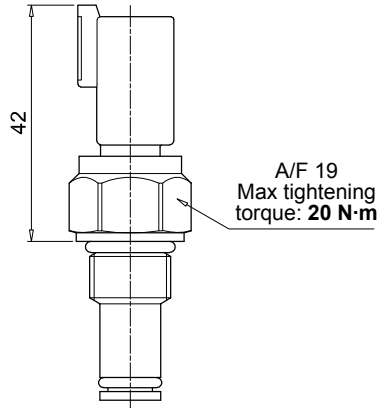

Hydraulic symbol

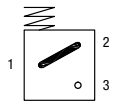

Electrical symbol

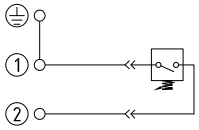

Materials
- Body: Brass
- Internal parts: Brass - Polyamide
- Contacts: Silver
- Seal: HNBR

Technical data
- Max working pressure: 16 bar
- Proof pressure: 24 bar
- Burst pressure: 48 bar
- Working temperature: From -25 °C to +110 °C
- Compatibility with fluids: Mineral oils, Synthetic fluids HFB and HFC according to ISO 2943
- Degree protection: IP67 according to EN 60529

Electrical data
- Electrical connection: Deutsch DT-04-2-P
- Resistive load: 0.2 A / 24 Vdc
- Switching type: Normally open contacts (NC on request)

DES*50

Electrical Differential Pressure Indicator
Connection: EN 175301-803

Settings	Ordering code
1.2 bar ±10%	DE S 12 H A 50 P01
2.5 bar ±10%	DE S 25 H A 50 P01
4.0 bar ±10%	DE S 40 H A 50 P01

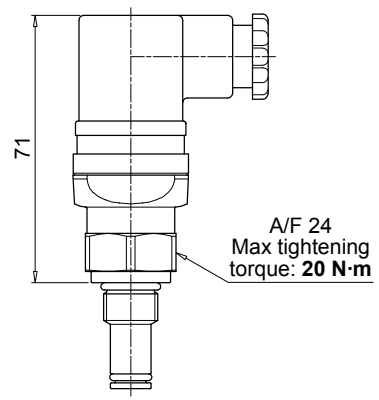

Hydraulic symbol

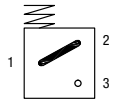

Electrical symbol

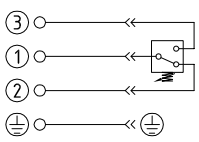

Materials
- Body: Aluminium
- Internal parts: Aluminium - Polyamide
- Contacts: Silver
- Seal: HNBR

Technical data
- Max working pressure: 35 bar
- Proof pressure: 53 bar
- Burst pressure: 105 bar
- Working temperature: From -25 °C to +110 °C
- Compatibility with fluids: Mineral oils, Synthetic fluids HFB and HFC according to ISO 2943
- Degree protection: IP66 according to EN 60529 IP69K according to EN 20653

Electrical data
- Electrical connection: EN 175301-803
- Resistive load: 0.2 A / 115 Vdc

DES*80

Electrical Differential Pressure Indicator
Stud #10-32 UNF

Settings	Ordering code
1.2 bar ±10%	DE S 12 H A 80 P01
2.5 bar ±10%	DE S 25 H A 80 P01
4.0 bar ±10%	DE S 40 H A 80 P01

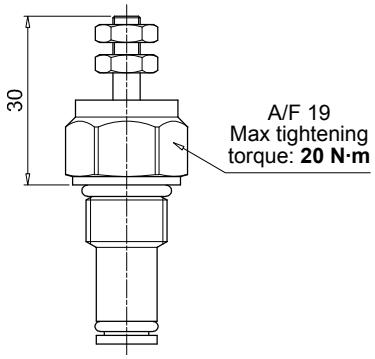

Hydraulic symbol

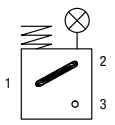

Electrical symbol

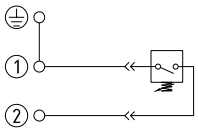

Materials
- Body: Brass
- Internal parts: Brass - Polyamide
- Contacts: Silver
- Seal: HNBR

Technical data
- Max working pressure: 16 bar
- Proof pressure: 24 bar
- Burst pressure: 48 bar
- Working temperature: From -25 °C to +110 °C
- Compatibility with fluids: Mineral oils, Synthetic fluids HFB and HFC according to ISO 2943
- Degree protection: IP67 according to EN 60529

Electrical data
- Electrical connection: Stud #10-32 UNF
- Resistive load: 0.2 A / 24 Vdc
- Switching type: Normally open contacts (NC on request)

DEU*50 UL

Electrical Differential Pressure Indicator
Connection EN 175301-803

Settings	Ordering code
2.0 bar ±10%	DE U 20 V A 50 P01 UL
5.0 bar ±10%	DE U 50 V A 50 P01 UL
7.0 bar ±10%	DE U 70 V A 50 P01 UL

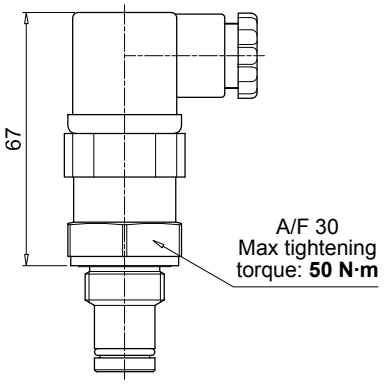

Hydraulic symbol

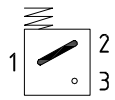

Electrical symbol

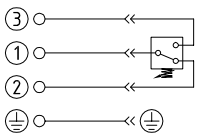

- Certification: UL
- Certification included as standard

Materials
- Body: Brass
- Base: Black Polyamide
- Contacts: Silver
- Seal: FPM

Technical data
- Max working pressure: 210 bar
- Proof pressure: 220 bar
- Burst pressure: 880 bar
- Working temperature: From --25 °C to +85 °C
- Compatibility with fluids: Mineral oils, Synthetic fluids HFB and HFC according to ISO 2943
- Degree protection: IP65 according to EN 60529

Electrical data
- Electrical connection: EN 175301-803
- Resistive load: 3 A / 30 Vdc
  3 A / 125 Vac
  3 (3) A / 250 Vac

DEX*50

Electrical Differential Pressure Indicator
Connection: EN 175301-803

Settings	Ordering code
1.2 bar ±10%	DE X 12 x A 50 P01
2.0 bar ±10%	DE X 20 x A 50 P01
5.0 bar ±10%	DE X 50 x A 50 P01
7.0 bar ±10%	DE X 70 x A 50 P01
9.5 bar ±10%	DE X 95 x A 50 P01

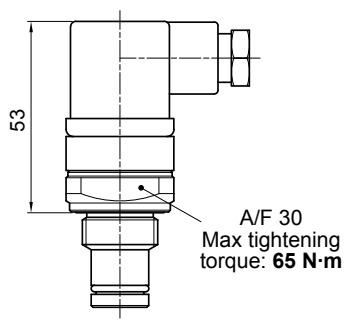

Hydraulic symbol

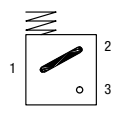

Electrical symbol

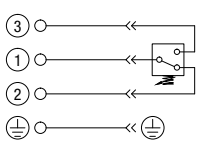

Materials
- Body: AISI 316L
- Base: Black polyamide
- Contacts: Silver
- Seal: HNBR - MFQ

Technical data
- Max working pressure: 420 bar
- Proof pressure: 630 bar
- Burst pressure: 1260 bar
- Working temperature: From -25 °C to +110 °C
- Compatibility with fluids: Mineral oils, Synthetic fluids HFB and HFC according to ISO 2943
- Degree protection: IP66 according to EN 60529
  IP69K according to ISO 20653

Electrical data
- Electrical connection: EN 175301-803
- Resistive load: 0.2 A / 115 Vdc

Dimensions

DEZ*50

Electrical Differential Pressure Indicator
Connection: EN 175301-803

Settings	Ordering code
5.0 bar ±10%	DE Z 50 x A 50 P01
7.0 bar ±10%	DE Z 70 x A 50 P01
9.5 bar ±10%	DE Z 95 x A 50 P01

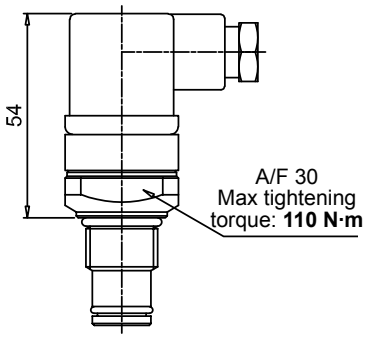

Hydraulic symbol

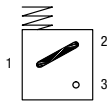

Electrical symbol

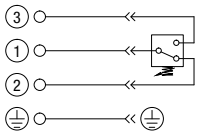

Materials
- Body: AISI 316L
- Base: Black polyamide
- Contacts: Silver
- Seal: HNBR - MFQ

Technical data
- Max working pressure: 700 bar
- Proof pressure: 1050 bar
- Burst pressure: 2100 bar
- Working temperature: From -25 °C to +110 °C
- Compatibility with fluids: Mineral oils, Synthetic fluids HFA, HFB, HFC according to ISO 2943
- Degree protection: IP66 according to EN 60529 IP69K according to ISO 20653

Electrical data
- Electrical connection: EN 175301-803
- Resistive load: 0.2 A / 115 Vdc

DLA*51 - DLA*52

Electrical/Visual Differential Pressure Indicator
Connection: EN 175301-803
51: Transparent base with lamps 24 Vdc
52: Transparent base with lamps 110 Vdc

Settings	Ordering code
1.2 bar ±10%	DL A 12 x A xx P01
2.0 bar ±10%	DL A 20 x A xx P01
5.0 bar ±10%	DL A 50 x A xx P01
7.0 bar ±10%	DL A 70 x A xx P01
9.5 bar ±10%	DL A 95 x A xx P01

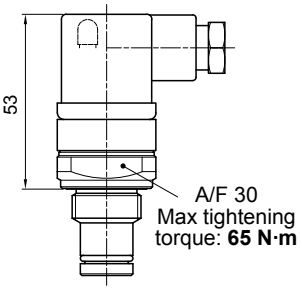

Hydraulic symbol

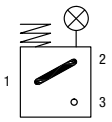

Electrical symbol

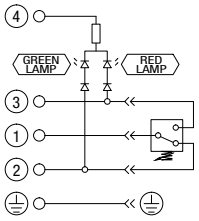

Materials
- Body: Brass
- Base: Transparent polyamide
- Contacts: Silver
- Seal: HNBR - FPM

Technical data
- Max working pressure: 420 bar
- Proof pressure: 630 bar
- Burst pressure: 1260 bar
- Working temperature: From -25 °C to +110 °C
- Compatibility with fluids: Mineral oils, Synthetic fluids HFB and HFC according to ISO 2943
- Degree protection: IP66 according to EN 60529 IP69K according to ISO 20653

Electrical data

- Electrical connection:	EN 175301-803	
- Type	51	52
- Lamps	24 Vdc	110 Vdc
- Resistive load:	1 A / 24 Vdc	1 A / 110 Vdc

DLA*71

Electrical/Visual Differential pressure indicator
Connection IEC 61076-2-101 D (M12),
black base with lamps 24 Vdc

Settings	Ordering code
1.2 bar ±10%	DL A 12 x A 71 P01
2.0 bar ±10%	DL A 20 x A 71 P01
5.0 bar ±10%	DL A 50 x A 71 P01
7.0 bar ±10%	DL A 70 x A 71 P01
9.5 bar ±10%	DL A 95 x A 71 P01

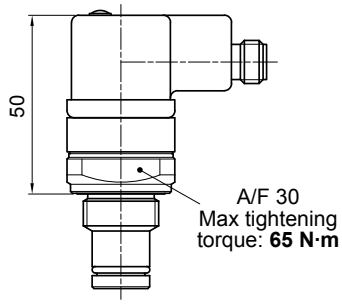

Hydraulic symbol

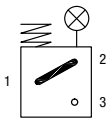

Electrical symbol

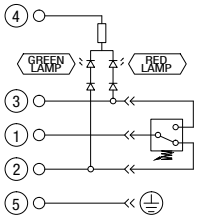

Materials
- Body: Brass
- Base: Black polyamide
- Contacts: Silver
- Seal: HNBR - FPM

Technical data
- Max working pressure: 420 bar
- Proof pressure: 630 bar
- Burst pressure: 1260 bar
- Working temperature: From -25 °C to +110 °C
- Compatibility with fluids: Mineral oils, Synthetic fluids HFB and HFC according to ISO 2943
- Degree protection: IP65 according to EN 60529 IP69K according to ISO 20653

Electrical data
- Electrical connection: IEC 61076-2-101 D (M12)
- Lamps 24 Vdc (black base)
- Resistive load: 0.4 A / 24 Vdc

DLE*A50

Electrical/Visual Differential Pressure Indicator
Without term. Connections: EN 175301-803

Settings	Ordering code
1.2 bar ±10%	DL E 12 x A 50 P01
2.0 bar ±10%	DL E 20 x A 50 P01
5.0 bar ±10%	DL E 50 x A 50 P01
7.0 bar ±10%	DL E 70 x A 50 P01
9.5 bar ±10%	DL E 95 x A 50 P01

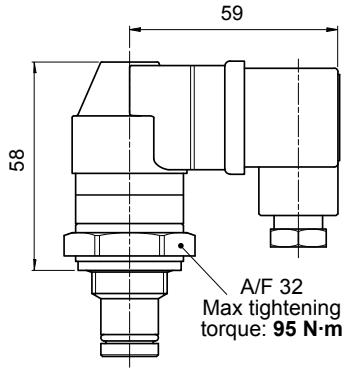

Hydraulic symbol

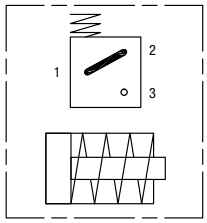

Electrical symbol

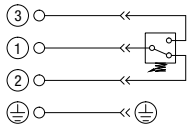

Materials
- Body: Brass
- Base: Black polyamide
- Contacts: Silver
- Seal: HNBR - FPM

Technical data
- Max working pressure: 420 bar
- Proof pressure: 630 bar
- Burst pressure: 1260 bar
- Working temperature: From -25 °C to +110 °C
- Compatibility with fluids: Mineral oils, Synthetic fluids HFB and HFC according to ISO 2943
- Degree protection: IP65 according to EN 60529

Electrical data
- Electrical connections: EN 175301-803
- Resistive load: 5 A / 250 Vac
- Available the connector with lamps

DLE*F50

Electrical/Visual Differential Pressure Indicator
With term. Connections: EN 175301-803

Settings	Ordering code
1.2 bar ±10%	DL E 12 x F 50 P01
2.0 bar ±10%	DL E 20 x F 50 P01
5.0 bar ±10%	DL E 50 x F 50 P01
7.0 bar ±10%	DL E 70 x F 50 P01
9.5 bar ±10%	DL E 95 x F 50 P01

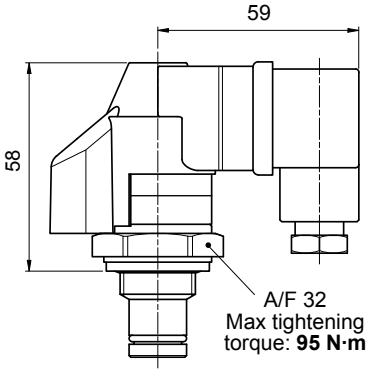

Hydraulic symbol

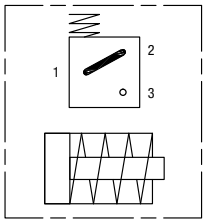

Electrical symbol

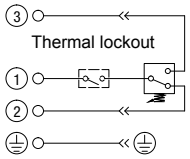

Materials
- Body: Brass
- Base: Black polyamide
- Contacts: Silver
- Seal: HNBR - FPM

Technical data
- Max working pressure: 420 bar
- Proof pressure: 630 bar
- Burst pressure: 1260 bar
- Working temperature: From -25 °C to +110 °C
- Compatibility with fluids: Mineral oils, Synthetic fluids HFB and HFC according to ISO 2943
- Degree protection: IP65 according to EN 60529

Electrical data
- Electrical connections: EN 175301-803
- Resistive load: 5 A / 250 Vac
- Thermal lockout setting: +30 °C

DLX*51 - DLX*52

Electrical/Visual Differential Pressure Indicator
Connection: EN 175301-803

51: Transparent base with lamps 24 Vdc
52: Transparent base with lamps 110 Vdc

Settings	Ordering code
1.2 bar ±10%	DL X 12 x A 5x P01
2.0 bar ±10%	DL X 20 x A 5x P01
5.0 bar ±10%	DL X 50 x A 5x P01
7.0 bar ±10%	DL X 70 x A 5x P01
9.5 bar ±10%	DL X 95 x A 5x P01

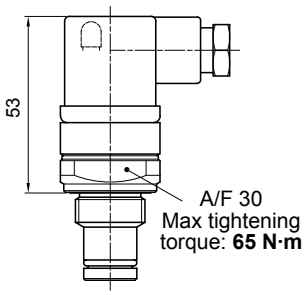

Hydraulic symbol

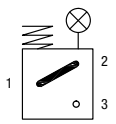

Electrical symbol

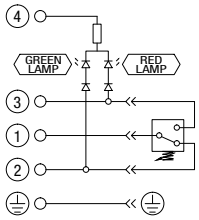

Materials
- Body: AISI 316L
- Base: Transparent polyamide
- Contacts: Silver
- Seal: HNBR - MFQ

Technical data
- Max working pressure: 420 bar
- Proof pressure: 630 bar
- Burst pressure: 1260 bar
- Working temperature: From -25 °C to +110 °C
- Compatibility with fluids: Mineral oils, Synthetic fluids HFB and HFC according to ISO 2943
- Degree protection: IP66 according to EN 60529 IP69K according to ISO 20653

Electrical data

- Electrical connection:	EN 175301-803	
- Type	51	52
- Lamps	24 Vdc	110 Vdc
- Resistive load:	1 A / 24 Vdc	1 A / 110 Vdc

Dimensions

DLZ*51 - DLZ*52

Electrical/Visual Differential Pressure Indicator
Connection: EN 175301-803

51: Transparent base with lamps 24 Vdc
52: Transparent base with lamps 110 Vdc

Settings	Ordering code
1.2 bar ±10%	DL Z 12 x A 5x P01
2.5 bar ±10%	DL Z 25 x A 5x P01
5.0 bar ±10%	DL Z 50 x A 5x P01
7.0 bar ±10%	DL Z 70 x A 5x P01
9.5 bar ±10%	DL Z 95 x A 5x P01

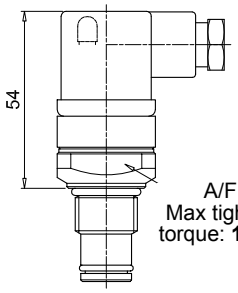

Hydraulic symbol

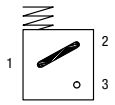

Electrical symbol

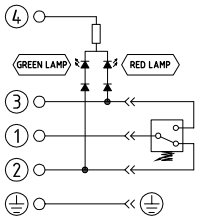

Materials
- Body: AISI 316L
- Base: Transparent polyamide
- Contacts: Silver
- Seal: HNBR - MFQ

Technical data
- Max working pressure: 700 bar
- Proof pressure: 1050 bar
- Burst pressure: 2100 bar
- Working temperature: From -25 °C to +110 °C
- Compatibility with fluids: Mineral oils, Synthetic fluids HFB and HFC according to ISO 2943
- Degree protection: IP66 according to EN 60529 IP69K according to ISO 20653

Electrical data

- Electrical connection:	EN 175301-803	
- Type	51	52
- Lamps	24 Vdc	110 Vdc
- Resistive load:	1 A / 24 Vdc	1 A / 110 Vdc

DTA*F70

Electronic Differential Pressure Indicator
Connection: IEC 61076-2-101 D (M12)

Settings	Ordering code
1.2 bar ±10%	DT A 12 x F 70 P01
2.0 bar ±10%	DT A 20 x F 70 P01
5.0 bar ±10%	DT A 50 x F 70 P01
7.0 bar ±10%	DT A 70 x F 70 P01
9.5 bar ±10%	DT A 95 x F 70 P01

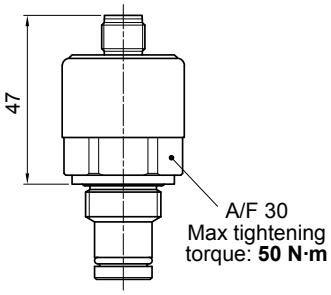

Hydraulic symbol

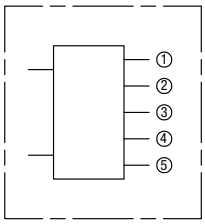

Electrical symbol

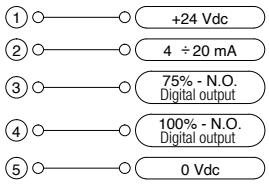

Materials
- Body: Brass
- Internal parts: Brass - Polyamide
- Contacts: Silver
- Seal: HNBR - FPM

Technical data
- Max working pressure: 420 bar
- Proof pressure: 630 bar
- Burst pressure: 1260 bar
- Compatibility with fluids: Mineral oils, Synthetic fluids HFB and HFC according to ISO 2943
- Degree protection: IP67 according to EN 60529

Electrical data
- Electrical connection: IEC 61076-2-101 D (M12)
- Power supply: 24 Vdc
- Analogue output: From 4 to 20 mA
- Thermal lockout: 30 °C (all output signals stalled up to 30 °C)

DTI*70

IO-Link Electronic Differential Pressure Indicator
Connection: IEC 61076-2-101 D (M12)

Settings	Ordering code
1.2 bar ±10%	DT I 12 x A 70 P01
2.0 bar ±10%	DT I 20 x A 70 P01
5.0 bar ±10%	DT I 50 x A 70 P01
7.0 bar ±10%	DT I 70 x A 70 P01
9.5 bar ±10%	DT I 95 x A 70 P01

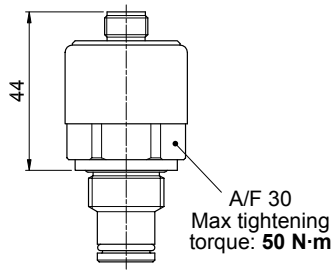

Hydraulic symbol

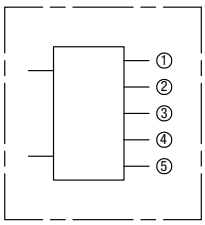

Electrical symbol

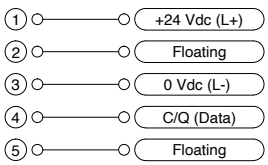

Materials
- Body: Brass
- Internal parts: Brass - Polyamide
- Contacts: Silver
- Seal: HNBR - FPM

Technical data
- Max working pressure: 420 bar
- Proof pressure: 630 bar
- Burst pressure: 1260 bar
- Compatibility with fluids: Mineral oils, Synthetic fluids HFB and HFC according to ISO 2943
- Degree protection: IP67 according to EN 60529

Electrical data
- Electrical connection: IEC 61076-2-101 D (M12)
- Power supply: 24 Vdc

IO-Link data
- Differential pressure [bar]: Float 32/4 byte
- Temperature [°C]: Float 32/4 byte
- State register: Unit 16/2 byte
- Errors register: Unit 16/2 byte

DVA

Visual Differential Pressure Indicator

Settings	Ordering code
1.2 bar ±10%	DV A 12 x P01
2.0 bar ±10%	DV A 20 x P01
5.0 bar ±10%	DV A 50 x P01
7.0 bar ±10%	DV A 70 x P01
9.5 bar ±10%	DV A 95 x P01

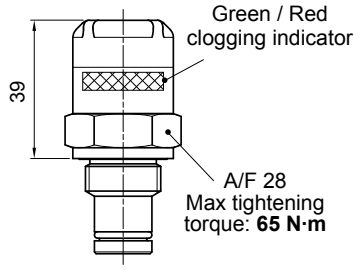

Hydraulic symbol

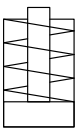

Materials
- Body: Brass
- Internal parts: Brass - Polyamide
- Seal: HNBR - FPM

Technical data
- Reset: Automatic reset
- Max working pressure: 420 bar
- Proof pressure: 630 bar
- Burst pressure: 1260 bar
- Working temperature: From -25 °C to +110 °C
- Compatibility with fluids: Mineral oils, Synthetic fluids HFB and HFC according to ISO 2943
- Degree protection: IP65 according to EN 60529

DVM

Visual Differential Pressure Indicator

Settings	Ordering code
1.2 bar ±10%	DV M 12 x P01
2.0 bar ±10%	DV M 20 x P01
5.0 bar ±10%	DV M 50 x P01
7.0 bar ±10%	DV M 70 x P01
9.5 bar ±10%	DV M 95 x P01

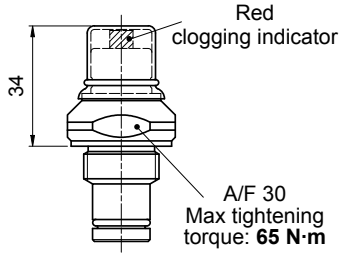

Hydraulic symbol

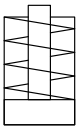

Materials
- Body: Brass
- Internal parts: Brass - Polyamide
- Seal: HNBR - FPM

Technical data
- Reset: Manual reset
- Max working pressure: 420 bar
- Proof pressure: 630 bar
- Burst pressure: 1260 bar
- Working temperature: From -25 °C to +110 °C
- Compatibility with fluids: Mineral oils, Synthetic fluids HFB and HFC according to ISO 2943
- Degree protection: IP65 according to EN 60529

DVS

Visual Differential Pressure Indicator
Connection: EN 175301-803

Settings	Ordering code
1.2 bar ±10%	DV S 12 H P01
2.5 bar ±10%	DV S 25 H P01
4.0 bar ±10%	DV S 40 H P01

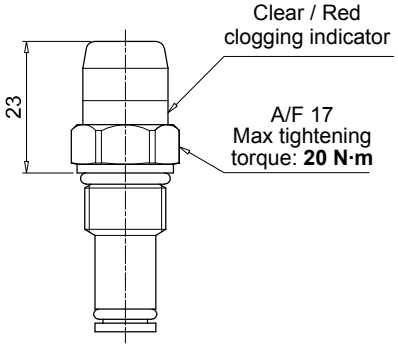

Hydraulic symbol

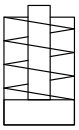

Materials
- Body: Brass
- Internal parts: Brass - Polyamide
- Seal: HNBR

Technical data
- Reset: Automatic reset
- Max working pressure: 35 bar
- Proof pressure: 53 bar
- Burst pressure: 105 bar
- Working temperature: From -25 °C to +110 °C
- Compatibility with fluids: Mineral oils, Synthetic fluids HFB and HFC according to ISO 2943
- Degree protection: IP67 according to EN 60529

Dimensions

DVX

Visual Differential Pressure Indicator

Settings	Ordering code
1.2 bar ±10%	DV X 12 x P01
2.0 bar ±10%	DV X 20 x P01
5.0 bar ±10%	DV X 50 x P01
7.0 bar ±10%	DV X 70 x P01
9.5 bar ±10%	DV X 95 x P01

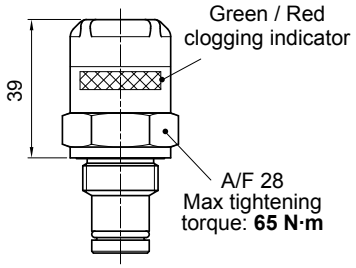

Hydraulic symbol

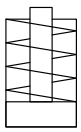

Materials
- Body: AISI 316L
- Internal parts: AISI 316L - Polyamide
- Seal: HNBR - MFQ

Technical data
- Reset: Automatic reset
- Max working pressure: 420 bar
- Proof pressure: 630 bar
- Burst pressure: 1260 bar
- Working temperature: From -25 °C to +110 °C
- Compatibility with fluids: Mineral oils, Synthetic fluids HFB and HFC according to ISO 2943
- Degree protection: IP65 according to EN 60529

DVY

Visual Differential Pressure Indicator

Settings	Ordering code
1.2 bar ±10%	DV Y 12 x P01
2.0 bar ±10%	DV Y 20 x P01
5.0 bar ±10%	DV Y 50 x P01
7.0 bar ±10%	DV Y 70 x P01
9.5 bar ±10%	DV Y 95 x P01

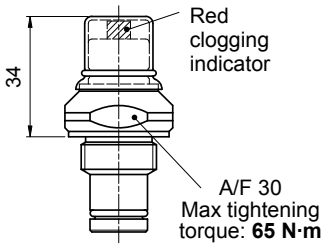

Hydraulic symbol

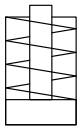

Materials
- Body: AISI 316L
- Internal parts: AISI 316L - Polyamide
- Seal: HNBR - MFQ

Technical data
- Reset: Manual reset
- Max working pressure: 420 bar
- Proof pressure: 630 bar
- Burst pressure: 1260 bar
- Working temperature: From -25 °C to +110 °C
- Compatibility with fluids: Mineral oils, Synthetic fluids HFB and HFC according to ISO 2943
- Degree protection: IP65 according to EN 60529

DVZ

Visual Differential Pressure Indicator

Settings	Ordering code
1.2 bar ±10%	DV Z 12 x P01
2.5 bar ±10%	DV Z 25 x P01
5.0 bar ±10%	DV Z 50 x P01
7.0 bar ±10%	DV Z 70 x P01
9.5 bar ±10%	DV Z 95 x P01

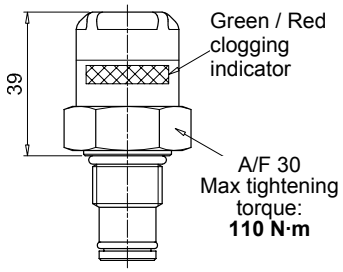

Hydraulic symbol

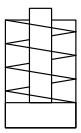

Materials
- Body: AISI 316L
- Internal parts: AISI 316L - Polyamide
- Seal: HNBR - MFQ

Technical data
- Reset: Automatic reset
- Max working pressure: 700 bar
- Proof pressure: 1050 bar
- Burst pressure: 2100 bar
- Working temperature: From -25 °C to +110 °C
- Compatibility with fluids: Mineral oils, Synthetic fluids HFB and HFC according to ISO 2943
- Degree protection: IP65 according to EN 60529

T2

Plug

Seal	Ordering code
HNBR	T2 H
FPM	T2 V

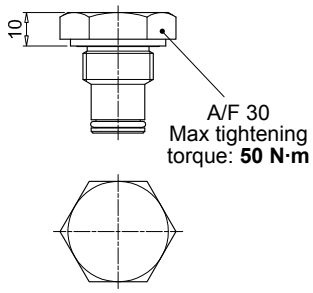

Materials
- Body:
  Phosphatized steel
- Seal:
  HNBR / FPM

T4

Plug

Seal	Ordering code
NBR	T4 A

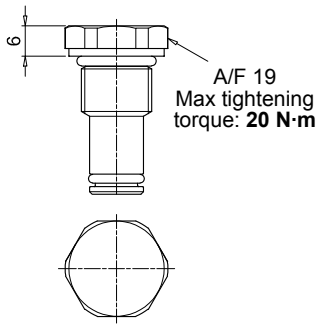

Materials
- Body:
  Anodized aluminium
- Seal:
  NBR

X2

Stainless Steel plug 420 bar

Seal	Ordering code
HNBR	X2 H
FPM	X2 V
MFQ	X2 F

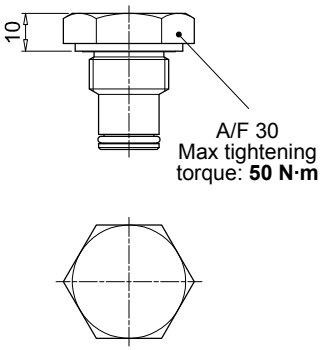

Materials
- Body:
  AISI 316L
- Seal:
  HNBR / FPM / MFQ

X3

Stainless Steel plug 700 bar (only for FZH)

Seal	Ordering code
HNBR	X3 H
FPM	X3 V
MFQ	X3 F

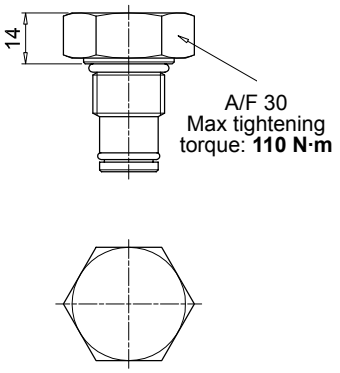

Materials
- Body:
  AISI 316L
- Seal:
  HNBR / FPM / MFQ

NOTES

All data, details and words contained in this publication are provided for use by technically qualified personnel at their discretion, without warranty of any kind.
MP Filtri reserves the right to make modifications to the models and versions of the described products at any time for both technical and/or commercial reasons.
For updated information please visit our website: *www.mpfiltri.com*
The colors and the pictures of the products are purely indicative.
Any reproduction, partial or total, of this document is strictly forbidden.
All rights are strictly reserved

WORLDWIDE NETWORK

CANADA • CHINA • FRANCE • GERMANY • INDIA • SINGAPORE
UNITED ARAB EMIRATES • UNITED KINGDOM • USA



MPFILTRI®

PASSION TO PERFORM

mpfiltri.com
Scan or click me!

MP Filtri reserves the right to make modifications to the models and versions of the described products at any time for both technical and/or commercial reasons.
For updated information please visit our website: www.mpfiltri.com. The colors and the pictures of the products are purely indicative.
Any reproduction, partial or total, of this document is strictly forbidden. All rights are strictly reserved

MF001000038
EN - 2025.09