SPIN-ON FILTERS

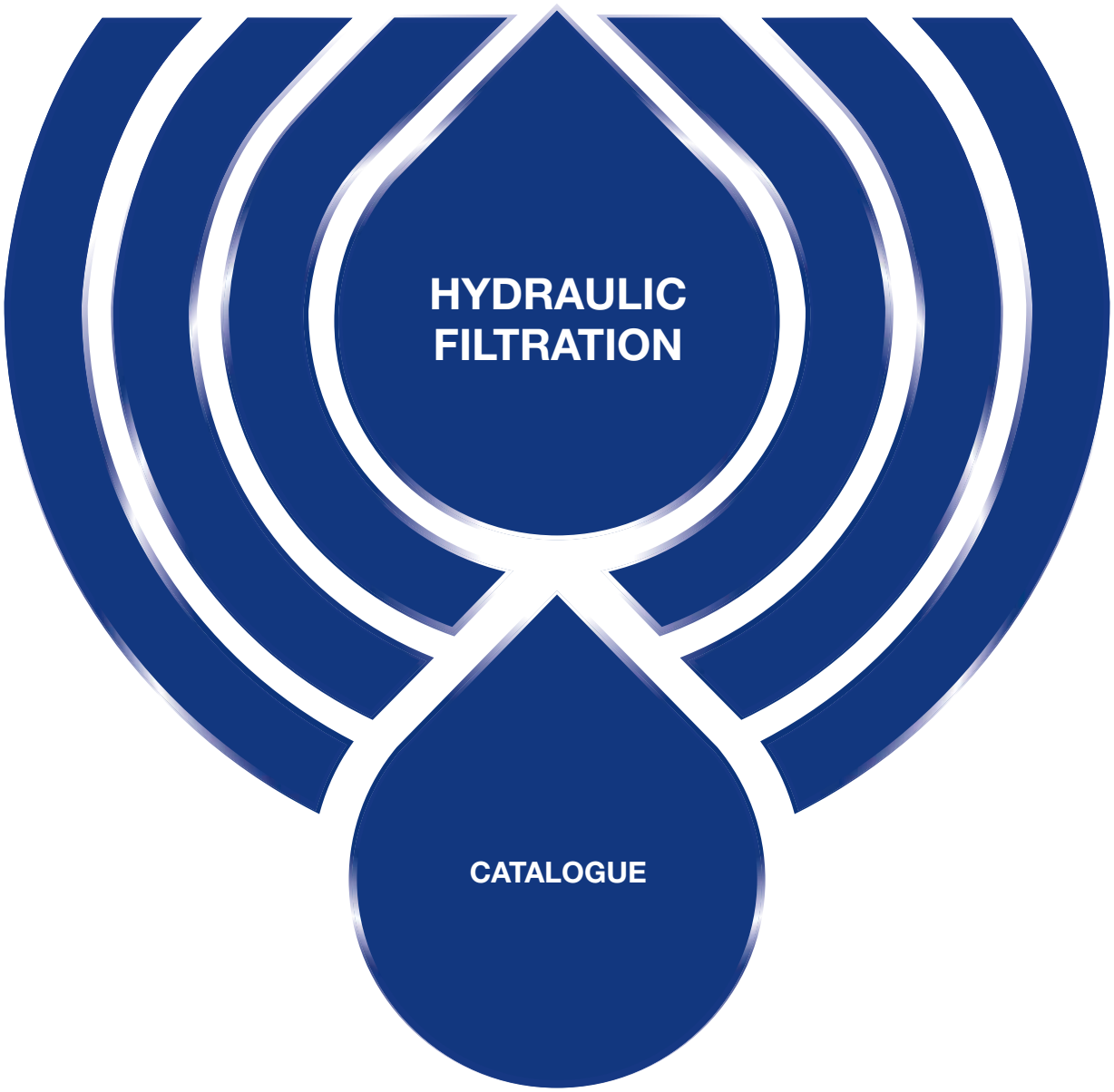

MPFILTRI®

PASSION TO PERFORM

CONTAMINATION MANAGEMENT

INDEX

		Page
1	HYDRAULIC FLUIDS	12
2	FLUIDS CONTAMINATION	12
3	FLUIDS COMPATIBILITY CHART	12
4	EFFECTS OF CONTAMINATION ON HYDRAULIC COMPONENTS	13
5	MEASURING THE SOLID CONTAMINATION LEVEL	13
6	FILTRATION TECHNOLOGIES	16
7	RECOMMENDED CONTAMINATION CLASSES	17
8	TYPES OF FILTERS	17
9	FILTER SIZING PARAMETERS	18
10	APPLICABLE STANDARDS FOR FILTER DEVELOPMENT	18
11	WATER IN HYDRAULIC AND LUBRICATING FLUIDS	19
12	THE ANTI-STATIC FILTERS zerospark	20

1 HYDRAULIC FLUIDS

The fluid is the vector that transmits power, energy within an oleodynamic circuit. In addition to transmitting energy through the circuit, it also performs additional functions such as lubrication, protection and cooling of the surfaces.
The classification of fluids used in hydraulic systems is coded in many regulatory references, different Standards.

The most important classification system for hydraulic fluids is the one defined by International Organization for Standardization (ISO), which established a classification system within their standard: "ISO 6743-4 Lubricants, Industrial Oils and Related Products" . In particular, the parts of interest for hydraulic fluids are:
- Lubricants, industrial oils and related products (class L)
- Classifications - Part 4L - Family H (Hydraulic systems)

The ISO 6743-4 classification system can be generally applied to the three primary classes of hydraulic fluids:

- Mineral Oils (i.e.: petroleum) Hydraulic Fluids (i.e.: HH: Mineral lubricants without corrosion inhibitors; HL: HH-type lubricants with oxidation reduction and anticorrosive additives; HM: HL-type lubricants with anti-wear additives; HV: HM-type lubricants with a higher viscosity grade and temperature properties; and others).

- Biodegradable Hydraulic Fluids (HExx), also defined as "Environmentally acceptable hydraulic fluids".

- Fire Resistant Hydraulic Fluids (HFxx), which could be further split into: Fire-resistant aqueous fluids (HFAx, HFB; HFC) ; Fire-resistant synthetic anhydrous fluids (HFDx).

The choice of fluid for an hydraulic system must take into account several parameters.
These parameters can adversely affect the performance of an hydraulic system, causing delay in the controls, pump cavitation, excessive absorption, excessive temperature rise, efficiency reduction, increased drainage, wear, jam/block or air intake in the plant.

The main properties that characterize hydraulic fluids and affect their choice are:
- DYNAMIC VISCOSITY
  It identifies the fluid's resistance to sliding due to the impact of the particles forming it.

- KINEMATIC VISCOSITY
  It is a widespread formal dimension in the hydraulic field.
  It is calculated with the ratio between the dynamic viscosity and the fluid density.
  Kinematic viscosity varies with temperature and pressure variations.

- VISCOSITY INDEX
  This value expresses the ability of a fluid to maintain viscosity when the temperature changes.
  A high viscosity index indicates the fluid's ability to limit viscosity variations by varying the temperature.

- FILTERABILITY INDEX
  It is the value that indicates the ability of a fluid to cross the filter materials.
  A low filterability index could cause premature clogging of the filter material.

- WORKING TEMPERATURE
  Working temperature affects the fundamental characteristics of the fluid.
  As already seen, some fluid characteristics, such as cinematic viscosity, vary with the temperature variation.
  When choosing a hydraulic oil, must therefore be taken into account of the environmental conditions in which the machine will operate.

- COMPRESSIBILITY MODULE
  Every fluid subjected to a pressure contracts, increasing its density.
  The compressibility module identifies the increase in pressure required to cause a corresponding increase in density.

- HYDROLYTIC STABILITY
  It is the characteristic that prevents galvanic pairs that can cause wear in the plant/system.

- ANTIOXIDANT STABILITY AND WEAR PROTECTION
  These features translate into the capacity of a hydraulic oil to avoid corrosion of metal elements inside the system.

- HEAT TRANSFER CAPACITY
  It is the characteristic that indicates the capacity of hydraulic oil to exchange heat with the surfaces and then cool them.

2 FLUID CONTAMINATION

Whatever the nature and properties of fluids, they are inevitably subject to contamination. Fluid contamination can have two origins:

- INITIAL CONTAMINATION
  Caused by the introduction of contaminated fluid into the circuit, or by incorrect storage, transport or transfer operations.

- PROGRESSIVE CONTAMINATION
  Caused by factors related to the operation of the system, such as metal surface wear, sealing wear, oxidation or degradation of the fluid, the introduction of contaminants during maintenance, corrosion due to chemical or electrochemical action between fluid and components, cavitation.
  The contamination of hydraulic systems can be of different nature:

- SOLID CONTAMINATION
  For example rust, slag, metal particles, fibers, rubber particles, paint particles or additives

- LIQUID CONTAMINATION
  For example, the presence of water due to condensation or external infiltration or acids

- GASEOUS CONTAMINATION
  For example, the presence of air due to inadequate oil level in the tank, drainage in suction ducts, incorrect sizing of tubes or tanks.

3 FLUID COMPATIBILITY CHARTS

For more detailed information on specific fluid compatibility please refer to the fluid compatibility charts on our website:

Scan or click me!

4 EFFECTS OF CONTAMINATION ON HYDRAULIC COMPONENTS

Solid contamination is recognized as the main cause of malfunction, failure and early degradation in hydraulic systems. It is impossible to delete it completely, but it can be effectively controlled by appropriate devices.

CONTAMINATION IN PRESENCE OF LARGE TOLERANCES



CONTAMINATION IN PRESENCE OF NARROW TOLERANCES

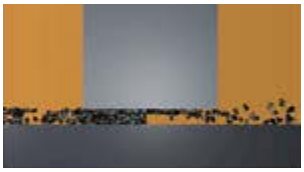

Solid contamination mainly causes surface damage and component wear.

- ABRASION OF SURFACES
  Cause of leakage through mechanical seals, reduction of system performance, failures.

- SURFACE EROSION
  Cause of leakage through mechanical seals, reduction of system performance, variation in adjustment of control components, failures.

- ADHESION OF MOVING PARTS
  Cause of failure due to lack of lubrication.

- DAMAGES DUE TO FATIGUE
  Cause of breakdowns and components breakdown.

ABRASION



EROSION



ADHESION



FATIGUE



Liquid contamination mainly results in decay of lubrication performance and protection of fluid surfaces.

DISSOLVED WATER

- INCREASING FLUID ACIDITY
  Cause of surface corrosion and premature fluid oxidation
- GALVANIC COUPLE AT HIGH TEMPERATURES
  Cause of corrosion

FREE WATER - ADDITIONAL EFFECTS

- DECAY OF LUBRICANT PERFORMANCE
  Cause of rust and sludge formation, metal corrosion and increased solid contamination
- BATTERY COLONY CREATION
  Cause of worsening in the filterability feature
- ICE CREATION AT LOW TEMPERATURES
  Cause damage to the surface
- ADDITIVE DEPLETION
  Free water retains polar additives

Gaseous contamination mainly results in decay of system performance.

- CUSHION SUSPENSION
  Cause of increased noise and cavitation.
- FLUID OXIDATION
  Cause of corrosion acceleration of metal parts.
- MODIFICATION OF FLUID PROPERTIES
  (COMPRESSIBILITY MODULE, DENSITY, VISCOSITY)
  Cause of system's reduction of efficiency and of control.
  It is easy to understand how a system without proper contamination management is subject to higher costs than a system that is provided.
- MAINTENANCE
  Increase maintenance activities, spare parts, machine stop costs.
- ENERGY AND EFFICIENCY
  Efficiency and performance reduction due to friction, drainage, cavitation.

5 MEASURING THE SOLID CONTAMINATION LEVEL

The level of contamination of a system identifies the amount of contaminant contained in a fluid. This parameter refers to a unit volume of fluid.
The level of contamination may be different at different points in the system. From the information in the previous paragraphs it is also apparent that the level of contamination is heavily influenced by the working conditions of the system, by its working years and by the environmental conditions.

What is the size of the contaminating particles that we must handle in our hydraulic circuit?



HUMAN HAIR
(75 µm)

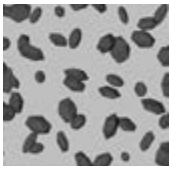

MINIMUM DIMENSION VISIBLE WITH HUMAN EYES
(40 µm)

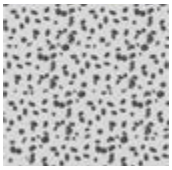

TYPICAL CONTAMINANT DIMENSION IN A HYDRAULIC CIRCUIT
(4 - 14 µm)

Contamination level analysis is significant only if performed with a uniform and repeatable method, conducted with standard test methods and suitably calibrated equipment. To this end, ISO has issued a set of standards that allow tests to be conducted and express the measured values in the following ways.

- GRAVIMETRIC LEVEL - ISO 4405

The level of contamination is defined by checking the weight of particles collected by a laboratory membrane. The membrane must be cleaned, dried and desiccated, with fluid and conditions defined by the Standard.
The volume of fluid is filtered through the membrane by using a suitable suction system. The weight of the contaminant is determined by checking the weight of the membrane before and after the fluid filtration.



CLEAN MEMBRANE



CONTAMINATED MEMBRANE

- CUMULATIVE DISTRIBUTION OF THE PARTICLES SIZE - ISO 4406

The level of contamination is defined by counting the number of particles of certain dimensions per unit of volume of fluid. Measurement is performed by Contamination Monitoring Products (CMP).
Following the count, the contamination classes are determined, corresponding to the number of particles detected in the unit of fluid.
The most common classification methods follow ISO 4406 and SAE AS 4059 (Aerospace Sector) regulations.
NAS 1638 is still used although obsolete.

Classification example according to ISO 4406

The International Standards Organization standard ISO 4406 is the preferred method of quoting the number of solid contaminant particles in a sample. The level of contamination is defined by counting the number of particles of certain dimensions per unit of volume of fluid. The measurement is performed by Contamination Monitoring Products (CMP).

The numbers represent a code which identifies the number of particles of certain sizes in 1ml of fluid. Each code number has a particular size range.
The first scale number represents the number of particles equal to or larger than 4 $\mu m_{(c)}$ per millilitre of fluid;
The second scale number represents the number of particles equal to or larger than 6 $\mu m_{(c)}$ per millilitre of fluid;
The third scale number represents the number of particles equal to or larger than 14 $\mu m_{(c)}$ per millilitre of fluid.

ISO 4406 - Allocation of Scale Numbers

Level (code ISO 4406)	Particle count per 1 ml as per ISO 4406		Particle count per 100 ml as indicated in MP Filtri's monitors	
	more than	up to	more than	up to
> 28	2 500 000	> 2 500 000	250 000 000	> 250 000 000
28	1 300 000	2 500 000	130 000 000	250 000 000
27	640 000	1 300 000	64 000 000	130 000 000
26	320 000	640 000	32 000 000	64 000 000
25	160 000	320 000	16 000 000	32 000 000
24	80 000	160 000	8 000 000	16 000 000
23	40 000	80 000	4 000 000	8 000 000
22	20 000	40 000	2 000 000	4 000 000
21	10 000	20 000	1 000 000	2 000 000
20	5 000	10 000	500 000	1 000 000
19	2 500	5 000	250 000	500 000
18	1 300	2 500	130 000	250 000
17	640	1 300	64 000	130 000
16	320	640	32 000	64 000
15	160	320	16 000	32 000
14	80	160	8 000	16 000
13	40	80	4 000	8 000
12	20	40	2 000	4 000
11	10	20	1 000	2 000
10	5	10	500	1 000
9	2.5	5	250	500
8	1.3	2.5	130	250
7	0.64	1.3	64	130
6	0.32	0.64	32	64
5	0.16	0.32	16	32
4	0.08	0.16	8	16
3	0.04	0.08	4	8
2	0.02	0.04	2	4
1	0.01	0.02	1	2
0	0	0.01	0	1

> 4 $\mu m_{(c)}$ = 350 particles
> 6 $\mu m_{(c)}$ = 100 particles
> 14 $\mu m_{(c)}$ = 25 particles
16 / 14 / 12

ISO 4406 Cleanliness Code System

Microscope counting examines the particles differently to Contamination Monitoring Products (CMP) and the code is given with two scale numbers only. These are at 5 µm and 15 µm equivalent to the 6 $\mu m_{(c)}$ and 14 $\mu m_{(c)}$ of Contamination Monitoring Products (CMP).

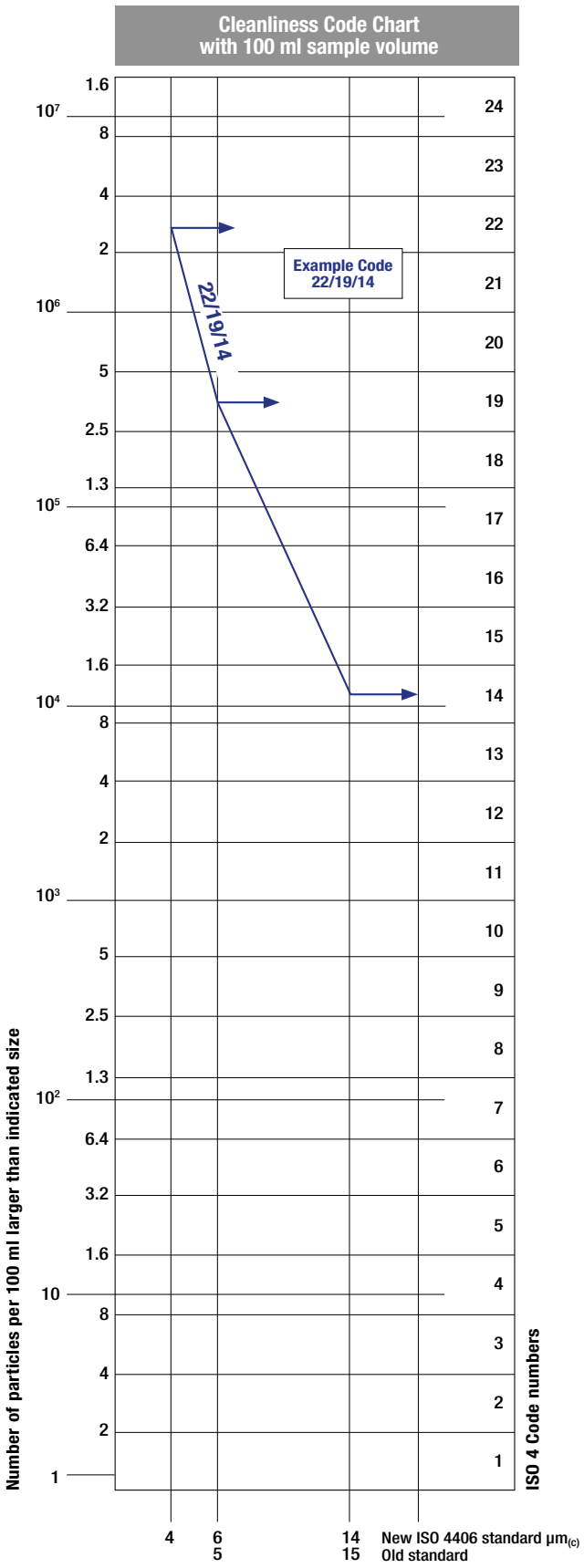

- CUMULATIVE DISTRIBUTION OF THE PARTICLES SIZE
  SAE AS4059-1 and SAE AS4059-2

Classification example according to SAE AS4059 - Rev. G

The code, prepared for the aerospace industry, is based on the size, quantity, and particle spacing in a 100 ml fluid sample. The contamination classes are defined by numeric codes, the size of the contaminant is identified by letters (A-F).

This SAE Aerospace Standard (AS) defines cleanliness levels for particulate contamination of hydraulic fluids and includes methods of reporting data relating to the contamination levels. Tables 1 and 2 below provide differential and cumulative particle counts respectively for counts obtained by an automatic particle counter, e.g. LPA3.

Table 1 - Class for differential measurement

Class	Dimension of contaminant Maximum Contamination Limits per 100 ml					(3)
	5-15 µm	15-25 µm	25-50 µm	50-100 µm	>100 µm	(1)
	6-14 $\mu m_{(c)}$	14-21 $\mu m_{(c)}$	21-38 $\mu m_{(c)}$	38-70 $\mu m_{(c)}$	>70 $\mu m_{(c)}$	(2)
00	125	22	4	1	0	
0	250	44	8	2	0	
1	500	89	16	3	1	
2	1 000	178	32	6	1	
3	2 000	356	63	11	2	
4	4 000	712	126	22	4	
5	8 000	1 425	253	45	8	
6	16 000	2 850	506	90	16	
7	32 000	5 700	1 012	180	32	
8	64 000	11 400	2 025	360	64	
9	128 000	22 800	4 050	720	128	
10	256 000	45 600	8 100	1 440	256	
11	512 000	91 200	16 200	2 880	512	
12	1 024 000	182 400	32 400	5 760	1 024	

6 - 14 $\mu m_{(c)}$ = 15 000 particles
14 - 21 $\mu m_{(c)}$ = 2 200 particles
21 - 38 $\mu m_{(c)}$ = 200 particles
38 - 70 $\mu m_{(c)}$ = 35 particles
> 70 $\mu m_{(c)}$ = 3 particles
SAE AS4059 REV G - Class 6

(1) Size range, optical microscope, based on longest dimension as measured per AS598 or ISO 4407. **(2)** Size range CMP calibrated per ISO 11171 or an optical or electron microscope with image analysis software, based on projected area equivalent diameter. **(3)** Contamination classes and particle count limits are identical to NAS 1638.

Table 2 - Class for cumulative measurement

Class	Dimension of contaminant Maximum Contamination Limits per 100 ml						(1)
	>1 µm	>5 µm	>15 µm	>25 µm	>50 µm	>100 µm	
	>4 $\mu m_{(c)}$	>6 $\mu m_{(c)}$	>14 $\mu m_{(c)}$	>21 $\mu m_{(c)}$	>38 $\mu m_{(c)}$	>70 $\mu m_{(c)}$	(2)
000	195	76	14	3	1	0	
00	390	152	27	5	1	0	
0	780	304	54	10	2	0	
1	1 560	609	109	20	4	1	
2	3 120	1 217	217	39	7	1	
3	6 250	2 432	432	76	13	2	
4	12 500	4 864	864	152	26	4	
5	25 000	9 731	1 731	306	53	8	
6	50 000	19 462	3 462	612	106	16	
7	100 000	38 924	6 924	1 224	212	32	
8	200 000	77 849	13 849	2 449	424	64	
9	400 000	155 698	27 698	4 898	848	128	
10	800 000	311 396	55 396	9 796	1 696	256	
11	1 600 000	622 792	110 792	19 592	3 392	512	
12	3 200 000	1 245 584	221 584	39 184	6 784	1 024	

> 4 $\mu m_{(c)}$ = 45 000 particles
> 6 $\mu m_{(c)}$ = 15 000 particles
> 14 $\mu m_{(c)}$ = 1 500 particles
> 21 $\mu m_{(c)}$ = 250 particles
> 38 $\mu m_{(c)}$ = 15 particles
> 70 $\mu m_{(c)}$ = 3 particle
SAE AS4059 REV G
cpc* Class 6 6/6/5/5/4/2

(1) Size range, optical microscope, based on longest dimension as measured per AS598 or ISO 4407. **(2)** Size range, CMP calibrated per ISO 11171 or an optical or electron microscope with image analysis software, based on projected area equivalent diameter. **(3)** Contamination classes and particle count limits are identical to NAS 1638.

* cumulative particle count

- CLASSES OF CONTAMINATION ACCORDING TO NAS 1638 (January 1964)

The NAS system was originally developed in 1964 to define contamination classes for the contamination contained within aircraft components.
The application of this standard was extended to industrial hydraulic systems simply because nothing else existed at the time.
The coding system defines the maximum numbers permitted of 100 ml volume at various size intervals (differential counts) rather than using cumulative counts as in ISO 4406. Although there is no guidance given in the standard on how to quote the levels, most industrial users quote a single code which is the highest recorded in all sizes and this convention is used on MP Filtri Contamination Monitoring Products (CMP).

The contamination classes are defined by a number (from 00 to 12) which indicates the maximum number of particles per 100 ml, counted on a differential basis, in a given size bracket.

Size Range Classes (in microns)

Maximum Contamination Limits per 100 ml					
Class	5-15	15-25	25-50	50-100	>100
00	125	22	4	1	0
0	250	44	8	2	0
1	500	89	16	3	1
2	1 000	178	32	6	1
3	2 000	356	63	11	2
4	4 000	712	126	22	4
5	8 000	1 425	253	45	8
6	16 000	2 850	506	90	16
7	32 000	5 700	1 012	180	32
8	64 000	11 400	2 025	360	64
9	128 000	22 800	4 050	720	128
10	256 000	45 600	8 100	1 440	256
11	512 000	91 200	16 200	2 880	512
12	1 024 000	182 400	32 400	5 760	1 024

5-15 µm = 42 000 particles
15-25 µm = 2 200 particles
25-50 µm = 150 particles
50-100 µm = 18 particles
> 100 µm = 3 particles
Class NAS 8

- CUMULATIVE DISTRIBUTION OF THE PARTICLES SIZE - ISO 4407

The level of contamination is defined by counting the number of particles collected by a laboratory membrane per unit of fluid volume. The measurement is done by a microscope. The membrane must be cleaned, dried and desiccated, with fluid and conditions defined by the Standard. The fluid volume is filtered through the membrane, using a suitable suction system.
The level of contamination is identified by dividing the membrane into a predefined number of areas and by counting the contaminant particles using a suitable laboratory microscope.

MICROSCOPE CONTROL AND MEASUREMENT



Example figure 1and 2

COMPARISON PHOTOGRAPH'S
1 graduation = 10µm

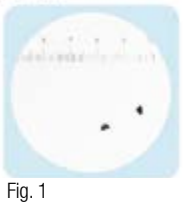

Fig. 1



Fig. 2

For other comparison photographs for contamination classes see the "*Filtration and Particle Analyser Handbook*".

Scan or click me!

- CLEANLINESS CODE COMPARISON

Although ISO 4406 standard is being used extensively within the hydraulics industry other standards are occasionally required and a comparison may be requested. The table below gives a very general comparison but often no direct comparison is possible due to the different classes and sizes involved.

ISO 4406	SAE AS4059 Table 2	SAE AS4059 Table 1	NAS 1638
> 4 µm(c) 6 µm(c) 14 µm(c)	> 4 µm(c) 6 µm(c) 14 µm(c)	4-6 6-14 14-21 21-38 38-70 >70	5-15 15-25 25-50 50-100 >100
23 / 21 / 18	13A / 12B / 12C	12	12
22 / 20 / 17	12A / 11B / 11C	11	11
21 / 19 / 16	11A / 10B / 10C	10	10
20 / 18 / 15	10A / 9B / 9B	9	9
19 / 17 / 14	9A / 8B / 8C	8	8
18 / 16 / 13	8A / 7B / 7C	7	7
17 / 15 / 12	7A / 6B / 6C	6	6
16 / 14 / 11	6A / 5B / 5C	5	5
15 / 13 / 10	5A / 4B / 4C	4	4
14 / 12 / 09	4A / 3B / 3C	3	3

6 FILTRATION TECHNOLOGIES

Various mechanisms such as mechanical stoppage, magnetism, gravimetric deposit, or centrifugal separation can be used to reduce the level of contamination.
The mechanical stoppage method is most effective and can take place in two ways:

- SURFACE FILTRATION
  It is by direct interception. The filter prevents particles larger than the pores from continuing in the plant / system. Surface filters are generally manufactured with metal canvases or meshes.

- DEPTH FILTERING
  Filters are constructed by fiber interlacing. Such wraps form pathways of different shapes and sizes in which the particles remain trapped when they find smaller apertures than their diameter.
  Depth filters are generally produced with papers impregnated with phenolic resins, metal fibers or inorganic fibers.
  In inorganic fiber filtration, commonly called microfibre, the filtering layers are often overlapped in order to increase the ability to retain the contaminant.

WIRE MESH FILTRATION

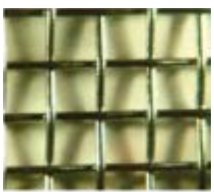

PAPER FILTRATION

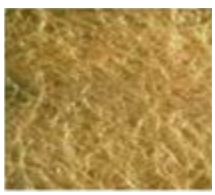

MICROFIBER FILTRATION

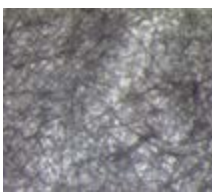

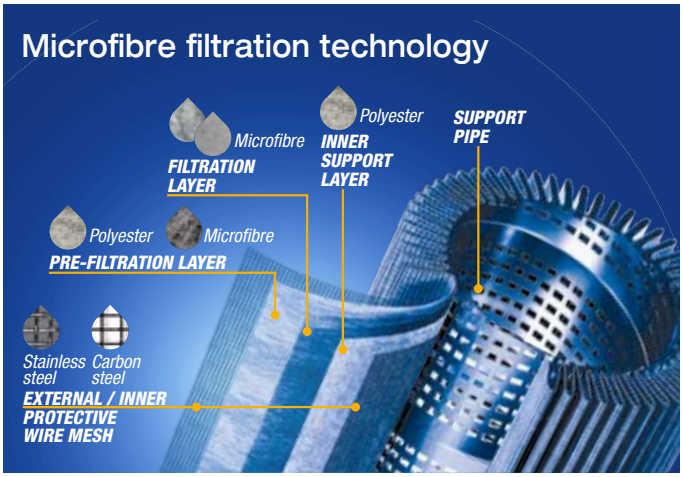

The filtration efficiency of metallic mesh filtrations is defined as the maximum particle size that can pass through the meshes of the filtering grid.
The efficiency of microfibre and paper filtration ($\beta_{x(c)}$) is defined through a lab test called Multipass Test. The efficiency value ($\beta_{x(c)}$) is defined as the ratio between the number of particles of certain dimensions detected upstream and downstream of the filter.

$$\frac{\text{Upstream particles number} > X\ \mu m_{(c)}}{\text{Downstream particles number} > X\ \mu m_{(c)}} = \beta_{x(c)}$$

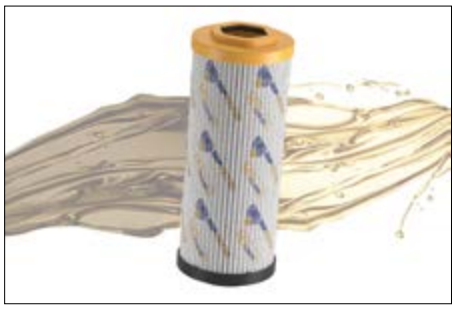

Value ($\beta_{x(c)}$)	2	10	75	100	200	1000
Efficiency	50%	90%	98.7%	99%	99.5%	99.9%

Test conditions, such as type of fluid to be used (MIL-H-5606), type of contaminant to be used (ISO MTD), fluid viscosity, test temperature, are determined by ISO 16889.
In addition to the filtration efficiency value during the Multipass test, other important features, such as filtration stability (β stability) and dirt holding capacity (DHC), are also tested.
Poor filtration stability is the cause of the filtering quality worsening as the filter life rises. Low dirt holding capacity causes a reduction in the life of the filter.

Filtration ISO Standard Comparison		
$\beta_{x(c)}$ > 1000 ISO 16889	β_x > 200 ISO 4572	MP Filtri Filter media code
5 µm(c)	3 µm	A03
7 µm(c)	6 µm	A06
10 µm(c)	10 µm	A10
16 µm(c)	18 µm	A16
21 µm(c)	25 µm	A25

7 RECOMMENDED CONTAMINATION CLASSES

Any are the nature and the properties of fluids, they are inevitably subject to contamination. The level of contamination can be managed by using special components called filters. Hydraulic components builders, knowing the problem of contamination, recommend the filtration level appropriate to the use of their products.
Example of recommended contamination levels for pressures below 140 bar.

Table of recommended hydraulic fluid cleanliness levels based on component typology and fluid pressure								
Filtration efficiency	$\beta_{5(c)} >= 1000$ 99,9 %			$\beta_{7(c)} >= 1000$ 99,9 %		$\beta_{12(c)} >= 1000$ 99,9 %	$\beta_{15(c)} >= 1000$ 99,9 %	$\beta_{21(c)} >= 1000$ 99,9 %
Filter fineness	3 µm abs.			6 µm abs.		10 µm abs.	16 µm abs.	25 µm abs.
MP Filtri media code	A(00)03			A(00)06		A(00)10	A(00)16	A(00)25
Ref. Standard	**Contamination levels**							
SAE AS4059 Table 1	2	3	4	5	6	7	8	9
NAS 1638	2	3	4	5	6	7	8	9
ISO 4406:2021	13/11/8	14/12/9	15/13/10	16/14/11	17/15/12	18/16/13	19/17/14	20/18/15
Component	**Recommended contamination levels depending on pressure**							
Piston pumps with fixed flow rate						HP	MP	LP
Piston pumps with variable flow rate				HP	MP	LP		
Vane pumps with fixed flow rate					HP	MP	LP	
Vane pumps with variable flow				HP	MP	LP		
Engines						HP	MP	LP
Hydraulic cylinders						HP	MP	LP
Actuators		HP	MP	LP				
Test benches	HP	MP	LP					
Check valve						HP	MP	LP
Directional valves						HP	MP	LP
Flow regulating valves						HP	MP	LP
Proportional valves			HP	MP	LP			
Servo-valves		HP	MP	LP				
Flat bearings				HP	MP			
Ball bearings			HP	MP	LP			

Legenda:
- **LP** — Low pressure (<=140 bar)
- **MP** — Medium pressure (between 140 bar and 210 bar)
- **HP** — High pressure (>=210 bar)

The common classification of filters is determined by their position in the plant.

8 TYPES OF FILTERS

Suction filters
Installed upstream of the pump, they protect it from biggest contaminants. Due to low operating pressures, they have a simple, lightweight construction and typically use lower filtration rating. A magnetic filter can be a feature to retain ferrous particles. They are generally placed under the fluid head to take advantage of the piezometric thrust of the fluid and reduce the risk of cavitation.

Retu
rn filters
Installed on the return line to the tank, they remove particles entering the system from outside or generated by component wear. Usually tank-mounted and partially or fully immersed, they must ensure submerged fluid discharge to prevent foam and pump cavitation. Sizing must consider accumulators or cylinders that may increase return flow above pump suction flow. Their low-pressure design allows simple, lightweight construction, and the filter element can normally be replaced without disconnecting the filter.

Combined filters (Return/Suction)
Designed for systems with two or more circuits, they are commonly used in hydrostatic transmissions, filtering both the return and pump suction lines. A valve maintains 0.5 bar pressure inside the filter. Part of the return fluid is filtered and supplied to the transmission booster pump, while excess fluid returns to the tank. Internal pressure and absolute filtration help prevent pump cavitation.

Delivery (or Pressure) filters
Installed between the pump and most sensitive regulating and controlling components, such as servo or proportional valves, they ensure the contamination class required by the components used in the circuit. Designed for various pressures, even very high, they have a robust construction and can be made of stainless steel for corrosive environments or aggressive fluids. Typical filtration ratings are higher. They are available with in-line, plate or flange connections, or integrated into circuit control blocks / manifolds. Duplex versions are available, to allow maintenance without interrupting system operation.

Off-line filters
Used mainly in large systems, they operate in an independent closed circuit with constant flow, regardless of the main system operation. Duplex versions allow maintenance without interrupting the working cycle.

Venting filters
Fluid level variations in the reservoir can cause continuous air exchange with the outside environment. Venting filters, installed on the tank, clean particles from the incoming air, due to these level changes.

9 FILTER SIZING PARAMETERS

The choice of the filter system for an hydraulic system is influenced by several factors.
It is necessary to consider the characteristics of the various components present in the plant and their sensitivity to contamination.

It is also necessary to consider all the tasks that the filter will have to do within the plant:
- FLUID PROTECTION FROM CONTAMINATION
- PROTECTION OF OLEODYNAMIC COMPONENTS SENSITIVE TO CONTAMINATION
- PROTECTION OF OLEODYNAMIC PLANTS FROM ENVIRONMENTAL WASTE
- PROTECTION OF OLEODYNAMIC PLANTS FROM CONTAMINATION CAUSED BY COMPONENTS' FAILURES

The advantages of proper positioning and sizing of the filters are
- MORE RELIABILITY OF THE SYSTEM
- LONGER LIFE OF THE FLUID COMPONENTS
- REDUCTION OF STOP TIME
- REDUCTION OF FAILURE CASUALITIES

Each hydraulic filter is described by general features that identify the possibility of use in different applications.

- *MAXIMUM WORKING PRESSURE (Pmax)*
  The maximum working pressure of the filter must be greater than or equal to the pressure of the circuit section in which it will be installed.

- *PRESSURE DROP (ΔP)*
  The pressure drop depends on a number of factors, such as the working circuit temperature, the fluid viscosity, the filter element cleaning condition.

- *WORKING TEMPERATURE (T)*
  The working temperature deeply affect the choice of materials. Excessively high or low temperatures may adversely affect the strength of the materials or the characteristics of the seals.

- *FILTRATION EFFICIENCY (%) / FILTRATION RATIO ($ß_{x(c)}$)*
  Filtration efficiency is the most important parameter to consider when selecting a filter.
  When choosing the filtration performances, the needs of the most sensitive components in the system must be considered.

- *FLUID TYPE*
  The type of fluid influences the choice of filters in terms of compatibility and viscosity. It is always mandatory to check the filterability.

- *PLACEMENT IN THE PLANT*
  The position of the filter in the system conditions the efficiency of all filter performances.

10 APPLICABLE STANDARDS FOR FILTER DEVELOPMENT

In order to obtain unique criteria for development and verification of the filters performance, specific regulations for the filters and filter elements testing have been issued by ISO. These norms describe the target, the methodology, the conditions and the presentation methods for the test results.

ISO 2941
Hydraulic fluid power -- Filter elements -- Verification of collapse/burst pressure rating
This Standard describes the method for testing the collapse / burst resistance of the filter elements.
The test is performed by crossing the contaminated fluid filter element at a predefined flow rate. The progressive clogging of the filter element, determined by contamination, causes an increase in differential pressure.

ISO 2942
Hydraulic fluid power -- Filter elements -- Verification of fabrication integrity and determination of the first bubble point
This Standard describes the method to verify the integrity of the assembled filter elements.
It can be used to verify the quality of the production process or the quality of the materials by verifying the pressure value of the first bubble point.

ISO 2943
Hydraulic fluid power -- Filter elements -- Verification of material compatibility with fluids
This Standard describes the method to verify the compatibility of materials with certain hydraulic fluids.
The test is carried out by keeping the element (the material sample) immersed in the fluid under high or low temperature conditions for a given period of time and verifying the retention of the characteristics.

ISO 3723
Hydraulic fluid power -- Filter elements -- Method for end load test
This Standard describes the method for verifying the axial load resistance of the filter elements.
After performing the procedure described in ISO 2943, the designed axial load is applied to the filter element. To verify the test results, then the test described in ISO 2941 is performed.

ISO 3968
Hydraulic fluid power -- Filters -- Evaluation of differential pressure versus flow characteristics
This Standard describes the method for checking the pressure drop across the filter.
The test is carried out by crossing the filter from a given fluid and by detecting upstream and downstream pressures.
Some of the parameters defined by the Standard are the fluid, the test temperature, the size of the tubes, the position of the pressure detection points.

ISO 16889
Hydraulic fluid power -- Filters -- Multi-pass method for evaluating filtration performance of a filter element
This Standard describes the method to check the filtration characteristics of the filter elements.
The test is performed by constant introduction of contaminant (ISO MTD). The characteristics observed during the test are the filtration efficiency and the dirty holding capacity related to the differential pressure.

ISO 23181

Hydraulic fluid power -- Filter elements -- Determination of resistance to flow fatigue using high viscosity fluid

This Standard describes the method for testing the fatigue resistance of the filter elements. The test is carried out by subjecting the filter to continuous flow variations, thus differential pressure, using a high viscosity fluid.

ISO 11170

Hydraulic fluid power -- Sequence of tests for verifying performance characteristics of filter elements

The Standard describes the method for testing the performance of filter elements. The protocol described by the regulations provides the sequence of all the tests described above in order to verify all the working characteristics (mechanical, hydraulic and filtration).

ISO 10771-1

Hydraulic fluid power -- Fatigue pressure testing of metal pressure-containing envelopes -- Test method

This Standard describes the method to check the resistance of the hydraulic components with pulsing pressure.
It can be applied to all metal components (excluding tubes) subject to cyclic pressure used in the hydraulic field.

11 WATER IN HYDRAULIC AND LUBRICATING FLUIDS

Water Content

In mineral oils and non aqueous resistant fluids water is undesirable. Mineral oil usually has a water content of 50-300 ppm (@40°C) which it can support without adverse consequences.
Once the water content exceeds about 300ppm the oil starts to appear hazy. Above this level there is a danger of free water accumulating in the system in areas of low flow. This can lead to corrosion and accelerated wear.
Similarly, fire resistant fluids have a natural water which may be different to mineral oil.

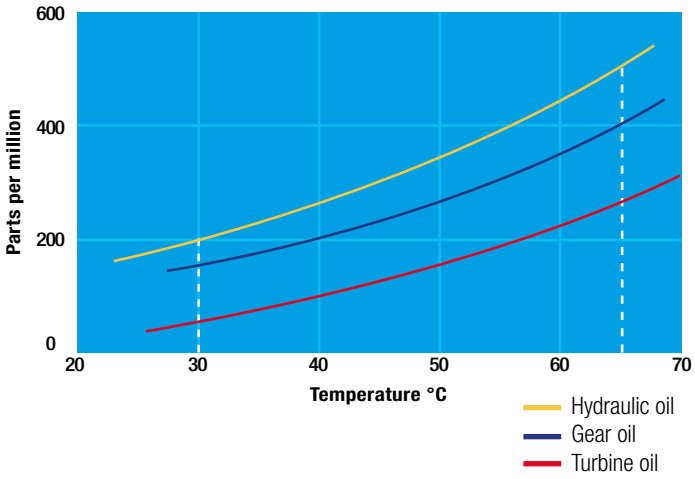

Saturation Levels

Since the effects of free (also emulsified) water is more harmful than those of dissolved water, water levels should remain well below the saturation point.

However, even water in solution can cause damage and therefore every reasonable effort should be made to keep saturation levels as low as possible. There is no such thing as too little water. As a guideline, we recommend maintaining saturation levels below 50% in all equipment.

TYPICAL WATER SATURATION LEVEL FOR NEW OILS
Examples:
Hydraulic oil @ 30°C = 200 ppm = 100% saturation
Hydraulic oil @ 65°C = 500 ppm = 100% saturation

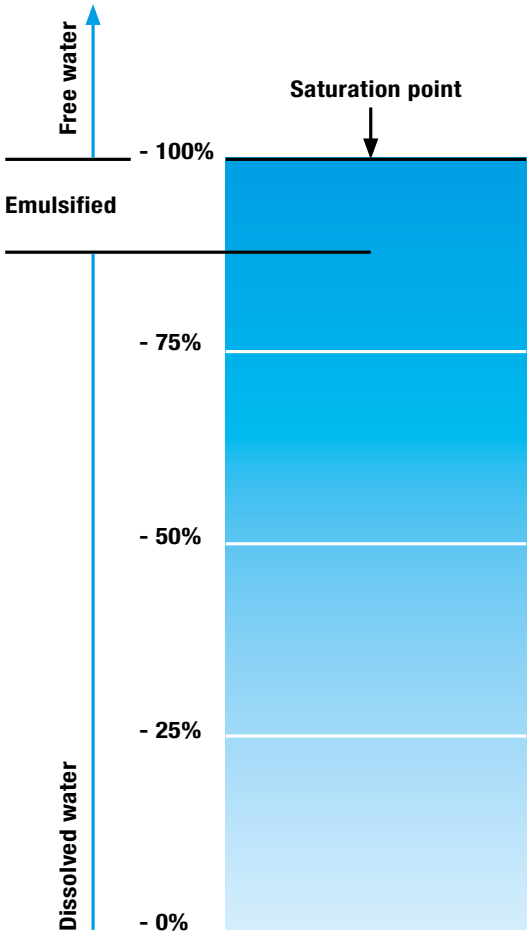

WATER REMOVAL

Water is present everywhere, during storage, handling and servicing.

MP Filtri filter elements feature an absorbent media which protects hydraulic systems from both particulate and water contamination.
MP Filtri's filter element technology is available with inorganic microfiber media with a filtration rating 25 µm (therefore identified with media designation WA025), providing absolute filtration of solid particles to $\beta_{x(c)} = 1000$.
Absorbent media is made by water absorbent fibres which increase in size during the absorption process.
Free water is thus bonded to the filter media and completely removed from the system (it cannot even be squeezed out).

Filter Media



Fabric that absorbs water

Absorber media layer



The Filter Media has absorbed water

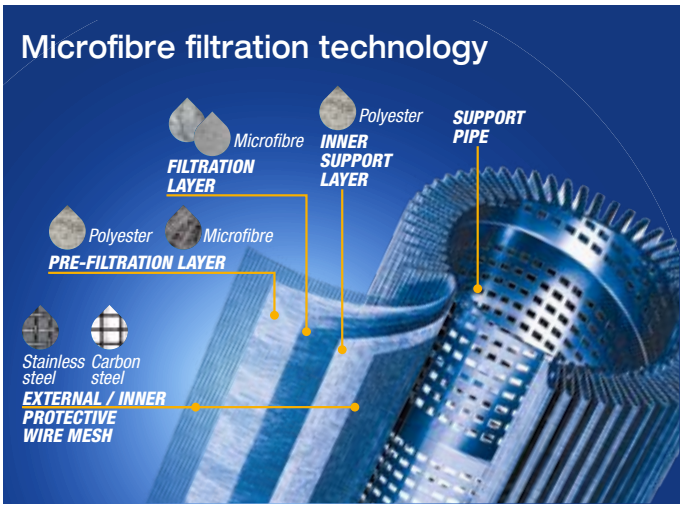

Microfibre filtration technology

By removing water from your fluid power system, you can prevent such key problems as:
- corrosion (metal etching)
- loss of lubricant power
- accelerated abrasive wear in hydraulic components
- valve-locking
- bearing fatigue
- viscosity variance (reduction in lubricating properties)
- additive precipitation and oil oxidation
- increase in acidity level
- increased electrical conductivity (loss of dielectric strength)
- slow/weak response of control systems



For more details please refer to our dedicate brochure "WATER REMOVAL"

Scan or click me!

(12) THE ANTI-STATIC FILTERS

zerospark®

zerospark is a specialist solution designed to solve the problem of electrostatic discharge inside hydraulic filters. Caused by the electrical charge build-up due to the passage of oil through the filters, this can result in damage to filter elements, oils and circuit components. It can even cause fire hazards in environments where flammable materials are present.

THE TRIBOELECTRIC EFFECT
The body with the most electronegativity strips electrons from the other, generating a build-up of a net negative charge on itself. The other body is charged by the same amount but with the opposite sign, giving rise to very high potential differences. These, if not dissipated, can give rise to electrostatic discharges.

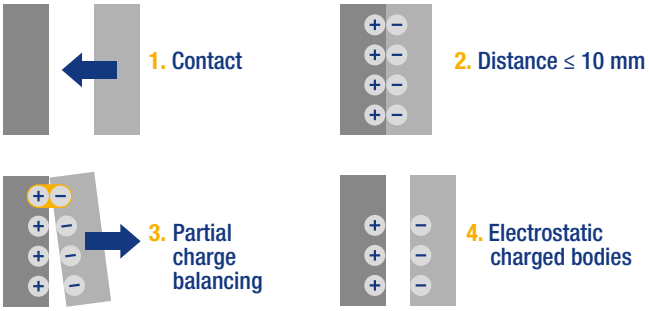





For more details please refer to our dedicate brochure "ZEROSPARK"

Scan or click me!

Filters sizing software

The web-based software program will allow you to select the most suitable MP Filtri's Filters, in accordance with your process design requirements.

The program will automatically check your input design process prior to propose you the acceptable solutions and create an output in PDF report style format.

The MP Filtri Selection Tool software program is easy to use with a flexible fast design method and provides improved layout formats with full descriptions.

The web-based tool is available at MP Filtri website at following link:
https://www.mpfiltri.com/tools/

The related, complete user guide is available as Manual and downloadable from the "Download" section of MP Filtri website, as well as scanning the following QR code

Scan or click me!



Spin-On filters are used as process and safety filters to protect individual pumps, valves or the entire hydraulic circuit from contamination as per ISO 4406.

In-line Spin-On filters can be used for the following purposes:
- **Suction filters**
- **On the return circuit, for mounting on the line or on the tank cover**
- **In-line for low and medium pressure applications**

Spin-On filters are available in 4 configurations:
- **Single cartridge in-line**
- **In-line with two parallel cartridges on the same axis**
- **In-line with two parallel cartridges mounted side by side**

All versions may be equipped with visual and/or electrical blockage indicators.

Spin-on filters



MPS	page 301
INDICATORS	781

MPS series

Maximum working pressure up to 1.2 MPa (12 bar) - Flow rate up to 365 l/min



MPS GENERAL INFORMATION

Description

Spin-on filters

Maximum working pressure up to 1.2 MPa (12 bar)
Flow rate up to 365 l/min

MPS is a range of spin-on filters suitable to be used in suction, return and low pressure lines.
They offer a good balance between performances, dimensions and prices.
They are directly connected to the lines of the system through the hydraulic fittings.

Available features:

- Female threaded connections up to 1 1/2" and flanged connections up to 1 1/2", for a maximum flow rate of 365 l/min
- Fine filtration rating, to get a good cleanliness level into the reservoir
- Water removal elements (CW), to remove the free water from the hydraulic fluid
- Double connection for the cans, to fit both European and American standard elements
- Double cans fitting, to increase the life time of the filter
- Bypass valve, to relieve excessive pressure drop across the filter media
- Visual, electrical and electronic clogging indicators for suction and return applications
- Visual, electrical and electronic differential clogging indicators for low pressure applications

Common applications:

- Suction lines, Return lines, Delivery lines, in economic industrial equipment or mobile machines.
- Off-line filtration tank in economic industrial equipment or mobile machines

Technical data

Filter housing materials

- Head: Aluminium
- Bypass valve: Polyamide - Steel
- Element: Zinc-Plated Steel - Painted steel

Pressure

- Test pressure: 1.8 MPa (18 bar)
- Min. Burst pressure: 3.6 MPa (36 bar)
- Pulse pressure fatigue test: 1 000 000 cycles with pressure from 0 to 1.2 MPa (12 bar)

Bypass valve

- Inline / Return filter opening pressure: 0.175 MPa (1.75 bar) ±10%
- Inline / Suction filter opening pressure: 0.03 MPa (0.3 bar) ±10%

Filter element features

Filter		Filter element
MPS		CS
Δp Element type		
Element media	Construction	Δp
A - Microfiber	Standard	5 bar
M - Wire mesh	Standard	5 bar
P - Paper	Standard	5 bar
Please see ordering code tables to check element Δp series availability based on filter features.		
Flow direction through the filter element: From OUT to IN		

Seals

Standard NBR - series A

Temperature

From -20 °C to +110 °C

Note

MPS filters are provided for vertical mounting

Weights [kg] and volumes [dm³]

Filter series	Weights [kg]	Volumes [dm³]
MPS 050	1.00	0.70
MPS 051	1.05	0.70
MPS 070	1.20	0.95
MPS 071	1.25	0.95
MPS 100	2.10	1.65
MPS 101	2.20	1.65
MPS 150	2.40	2.00
MPS 151	2.50	2.00
MPS 200	3.90	3.00
MPS 250	4.60	3.70
MPS 300-301	5.30	3.40
MPS 350-351	6.00	4.10

Hydraulic diagram

Filter series					
MPS 050	•	-	-	-	-
MPS 051	-	•	-	-	-
MPS 070	•	-	-	-	-
MPS 071	-	•	-	-	-
MPS 100	•	-	-	-	-
MPS 101	-	•	-	-	-
MPS 150	•	-	-	-	-
MPS 151	-	•	-	-	-
MPS 200	-	-	•	-	-
MPS 250	-	-	•	-	-
MPS 300	-	-	-	•	-
MPS 301	-	-	-	-	•
MPS 350	-	-	-	•	-
MPS 351	-	-	-	-	•
	Style U/P	Style U/P	Style U	Style U/P	Style U/P
	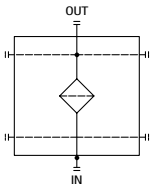	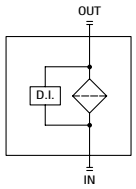	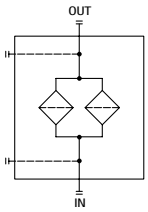	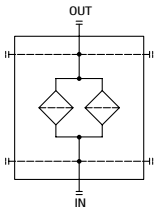	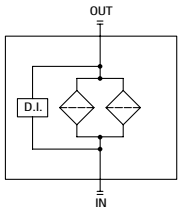
	Style R/S	Style R/S	Style R/S	Style R/S	Style R/S
	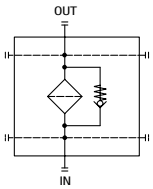	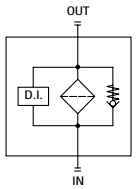	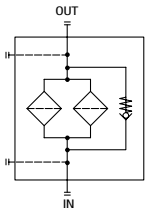	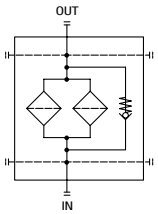	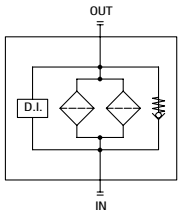

Pressure drop

Bypass valve pressure drop

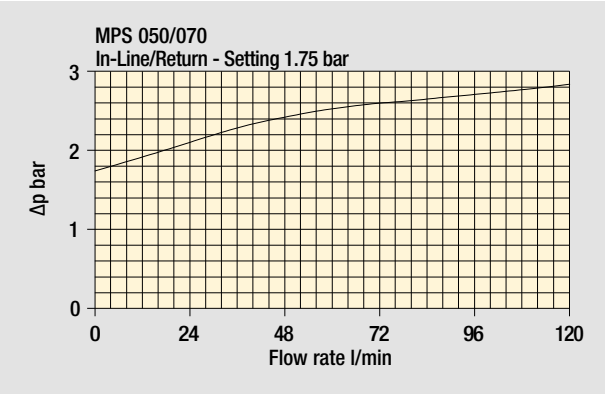

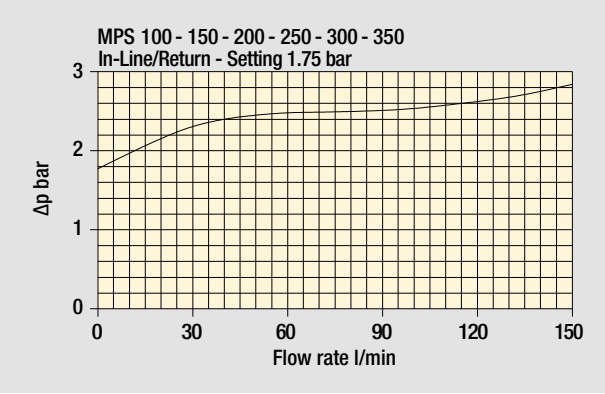

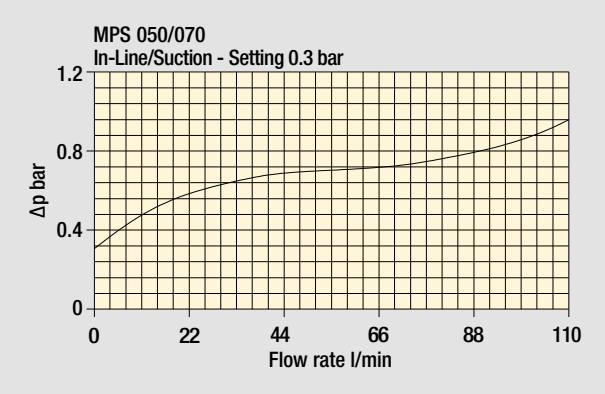

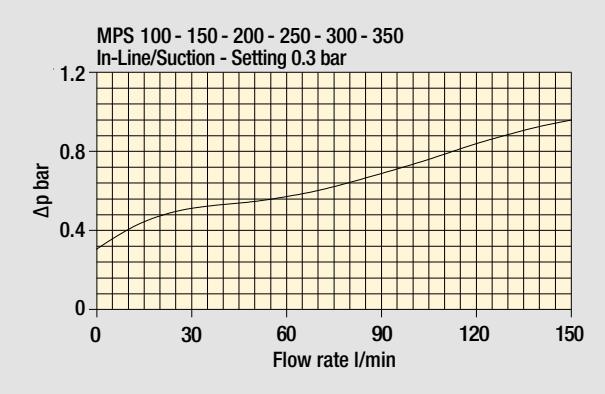

The curves are plotted using mineral oil with density of 0.86 kg/dm^3 in compliance with ISO 3968. Δp varies proportionally with density.

CS 050 - 070 - 100 - 150
CG - CW 050 - 070



CG - CW 100 - 150



CW
This series of cartridge removes water from oil while filtering the oil at the same time.
Water absorbent polymers up to 800 times their own weight provide this major feature.

Water holding capacities:
CW 050= 240 ml
Ordering code: **CW050P10AP01**

CW 150= 788 ml
Ordering code: **CW150P10AP01**

Thread connections	
Element	Connection
CS 050 - 070	G 3/4"
CS 100 - 150	G 1 1/4"
CG / CW 050 - 070	1" - 12 UNF
CG / CW 100 - 150	1 1/2" - 16 UN

Water holding capacities CW		
	good	poor
Viscosity	30/46 mm^2/s (cSt)	> 46 mm^2/s (cSt)
H_2O p.p.m.	600/800 p.p.m.	> 800 p.p.m.
Flow rate	CW050 7/15 l/min CW150 20/40 l/min	CW050 > 20 l/min CW150 > 50 l/min
Temperature	40/60 °C	< 30 °C

Heads

CS 050 - 070

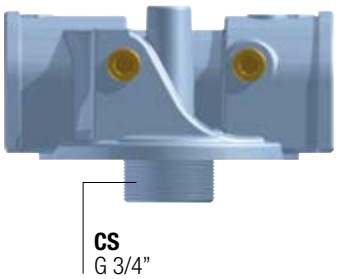

CG / CW 050 - 070

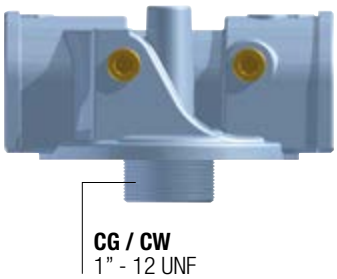

CS / CG / CW 100 - 150

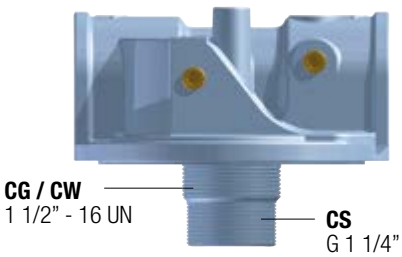

CG and CW cartridges are not foreseen as first equipment supply for MPS filters; they can be provided only as loose spare parts.
For this reason, only CS cartridges are foreseen as first equipment supply in the following Designation & Ordering code pages for MPS filters.

Designation & Ordering code

COMPLETE FILTER

Configuration example : MPS050 | R | G1 | A10 | A | P01

Series and size

MPS050	**MPS070**	With connections for clogging indicators
MPS051	**MPS071**	With connections for differential pressure indicators

Bypass valve

		MPS 050 - 070	MPS 051 - 071
R	Inline / Return: with bypass 1.75 bar	•	•
S	Inline / Suction: with bypass 0.3 bar	•	-
U	Without bypass	•	-
P	Without bypass	-	•

Connections

G1	G 3/4”
G2	3/4” NPT
G3	SAE 12 - 1 1/16” - 12 UN

Filtration rating (filter media)

A03	Inorganic microfiber	3 µm	**M25**	Wire mesh	25 µm
A06	Inorganic microfiber	6 µm	**M60**	Wire mesh	60 µm
A10	Inorganic microfiber	10 µm	**M90**	Wire mesh	90 µm
A25	Inorganic microfiber	25 µm	**P10**	Resin impregnated paper	10 µm
			P25	Resin impregnated paper	25 µm

Seal

A	NBR

Execution

P01	MP Filtri standard

CARTRIDGE

Configuration example: CS050 | A10 | A | P01

Cartridge series and size

CS050 | **CS070**

Filtration rating (filter media)

A03	Inorganic microfiber	3 µm	**M25**	Wire mesh	25 µm
A06	Inorganic microfiber	6 µm	**M60**	Wire mesh	60 µm
A10	Inorganic microfiber	10 µm	**M90**	Wire mesh	90 µm
A25	Inorganic microfiber	25 µm	**P10**	Resin impregnated paper	10 µm
			P25	Resin impregnated paper	25 µm

Seals

A	NBR

Execution

P01	MP Filtri standard
Pxx	Customized

CLOGGING INDICATORS

See pages 781-783

Clogging indicators on RETURN line

BVA	Axial pressure gauge
BVR	Radial pressure gauge
BVP	Visual pressure indicator with automatic reset
BVQ	Visual pressure indicator with manual reset
BEA	Electrical pressure indicator
BEM	Electrical pressure indicator
BET	Electrical pressure indicator
BLA	Electrical / visual pressure indicator

Clogging indicators on SUCTION line

VVB	Axial pressure gauge
VVS	Radial pressure gauge
VEB	Electrical vacuum indicator
VLB	Electrical / visual vacuum indicator

Differential pressure indicators

DEA	Electrical differential pressure indicator
DEM	Electrical differential pressure indicator
DEU	Electrical differential pressure indicator
DLA	Electrical / visual differential pressure indicator
DLE	Electrical / visual differential pressure indicator
DTA	Electronic differential pressure indicator
DTI	I-O Link electronic differential pressure indicator
DVA	Visual differential pressure indicator
DVM	Visual differential pressure indicator

Dimensions

MPS050 - MPS070

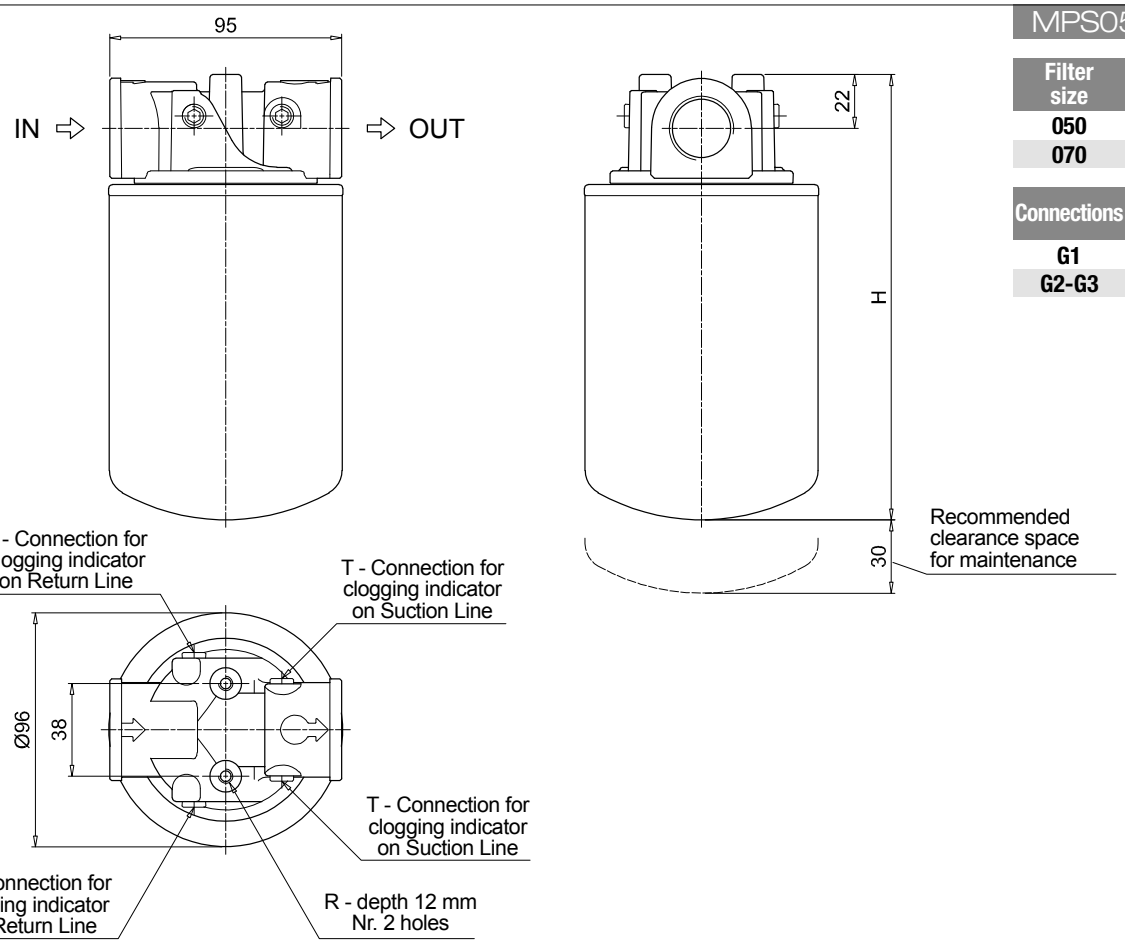

Filter size	H [mm]
050	192
070	256

Connections	T	R
G1	G 1/8"	M6
G2-G3	1/8" NPT	1/4" UNC

MPS051 - MPS071

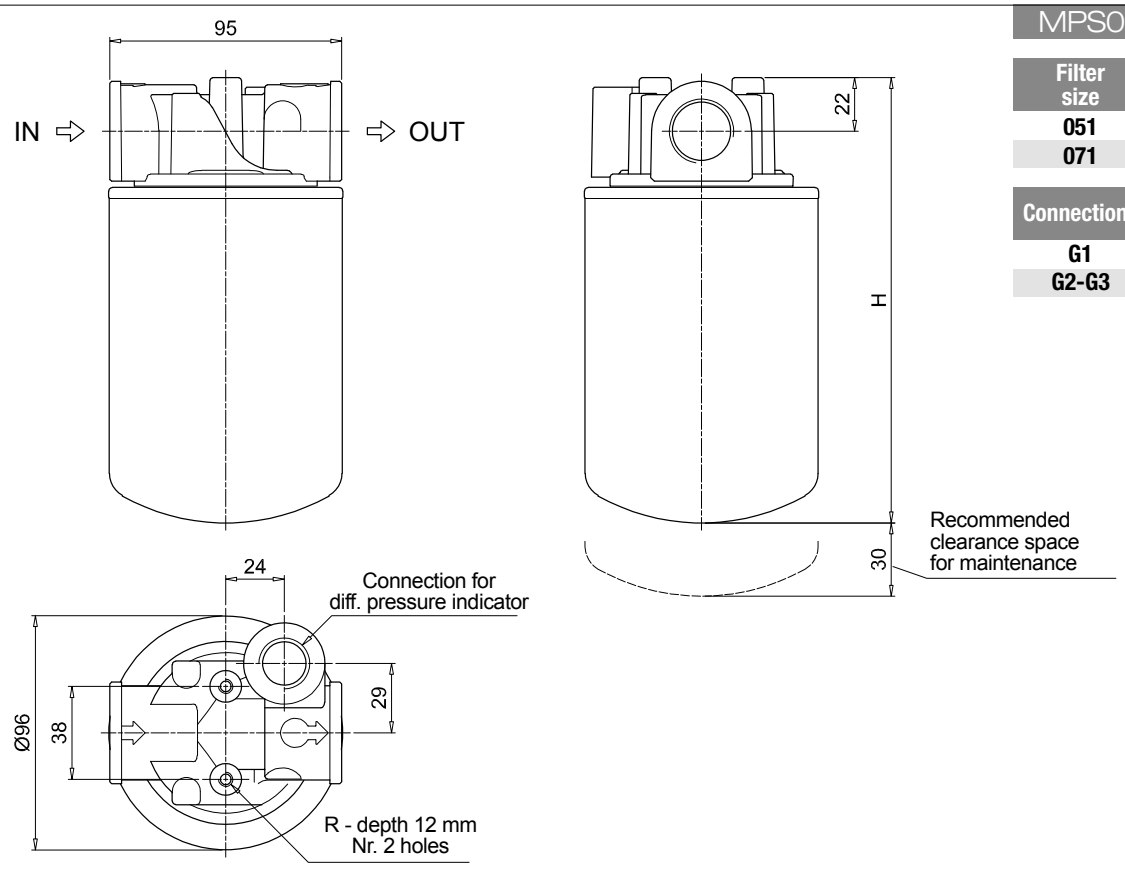

Filter size	H [mm]
051	192
071	256

Connections	R
G1	M6
G2-G3	1/4" UNC

Designation & Ordering code

COMPLETE FILTER

Configuration example : MPS100 | R | G1 | A10 | A | P01

Series and size

MPS100	**MPS150**	With connections for clogging indicators
MPS101	**MPS151**	With connections for differential pressure indicators

Bypass valve

		MPS 100 - 150	MPS 101 - 151
R	Inline / Return: with bypass 1.75 bar	•	•
S	Inline / Suction: with bypass 0.3 bar	•	-
U	Without bypass	•	-
P	Without bypass	-	•

Connections

G1	G 1 1/4”
G2	1 1/4” NPT
G3	SAE 20 - 1 5/8” - 12 UN

Filtration rating (filter media)

A03	Inorganic microfiber	3 µm	**M25**	Wire mesh	25 µm
A06	Inorganic microfiber	6 µm	**M60**	Wire mesh	60 µm
A10	Inorganic microfiber	10 µm	**M90**	Wire mesh	90 µm
A25	Inorganic microfiber	25 µm	**P10**	Resin impregnated paper	10 µm
			P25	Resin impregnated paper	25 µm

Seal

A	NBR

Execution

P01	MP Filtri standard

CARTRIDGE

Configuration example: CS100 | A10 | A | P01

Cartridge series and size

CS100 | **CS150**

Filtration rating (filter media)

A03	Inorganic microfiber	3 µm	**M25**	Wire mesh	25 µm
A06	Inorganic microfiber	6 µm	**M60**	Wire mesh	60 µm
A10	Inorganic microfiber	10 µm	**M90**	Wire mesh	90 µm
A25	Inorganic microfiber	25 µm	**P10**	Resin impregnated paper	10 µm
			P25	Resin impregnated paper	25 µm

Seals

A	NBR

Execution

P01	MP Filtri standard
Pxx	Customized

CLOGGING INDICATORS

See pages 781-783

Clogging indicators on RETURN line

BVA	Axial pressure gauge
BVR	Radial pressure gauge
BVP	Visual pressure indicator with automatic reset
BVQ	Visual pressure indicator with manual reset
BEA	Electrical pressure indicator
BEM	Electrical pressure indicator
BET	Electrical pressure indicator
BLA	Electrical / visual pressure indicator

Clogging indicators on SUCTION line

VVB	Axial pressure gauge
VVS	Radial pressure gauge
VEB	Electrical vacuum indicator
VLB	Electrical / visual vacuum indicator

Differential pressure indicators

DEA	Electrical differential pressure indicator
DEM	Electrical differential pressure indicator
DEU	Electrical differential pressure indicator
DLA	Electrical / visual differential pressure indicator
DLE	Electrical / visual differential pressure indicator
DTA	Electronic differential pressure indicator
DTI	I-O Link electronic differential pressure indicator
DVA	Visual differential pressure indicator
DVM	Visual differential pressure indicator

Dimensions

MPS100 - MPS150

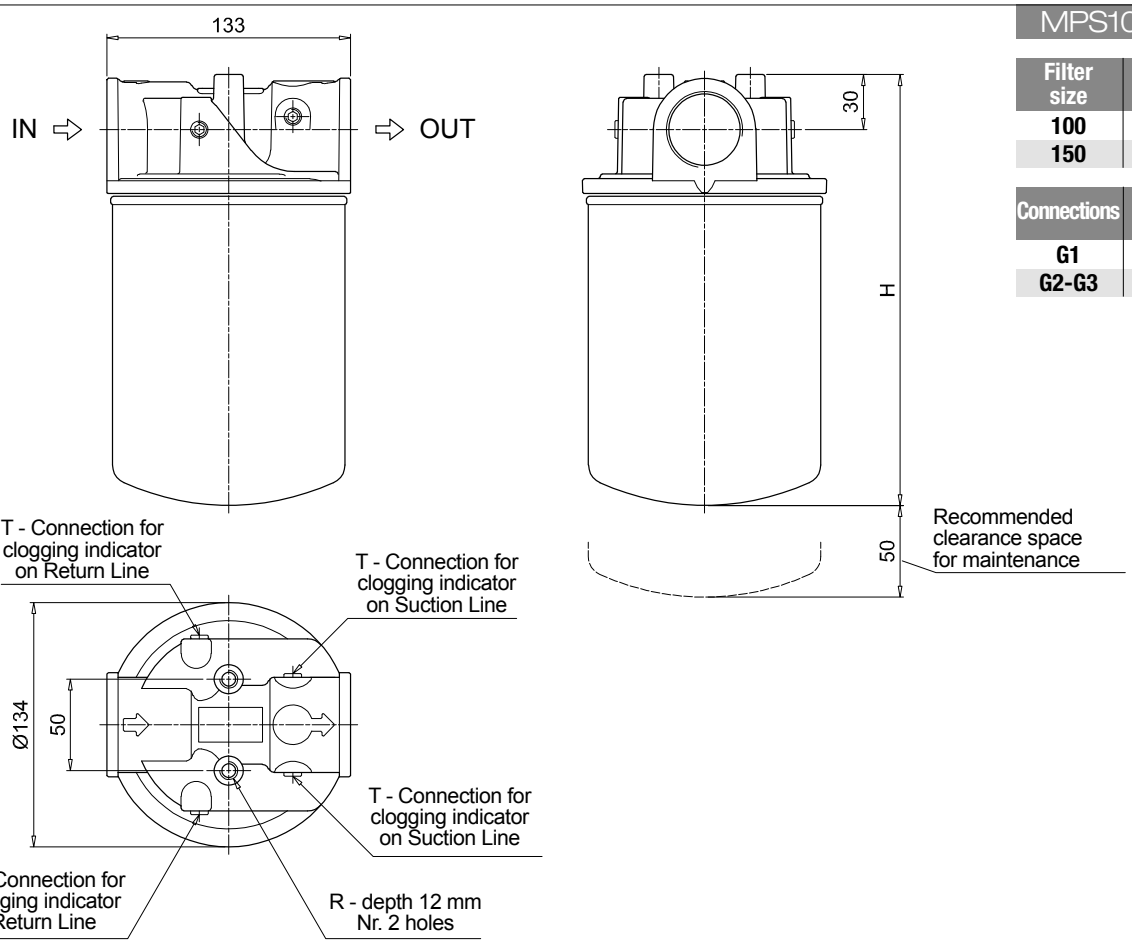

Filter size	H [mm]
100	246
150	295

Connections	T	R
G1	G 1/8"	M8
G2-G3	1/8" NPT	5/16" UNC

MPS101 - MPS151

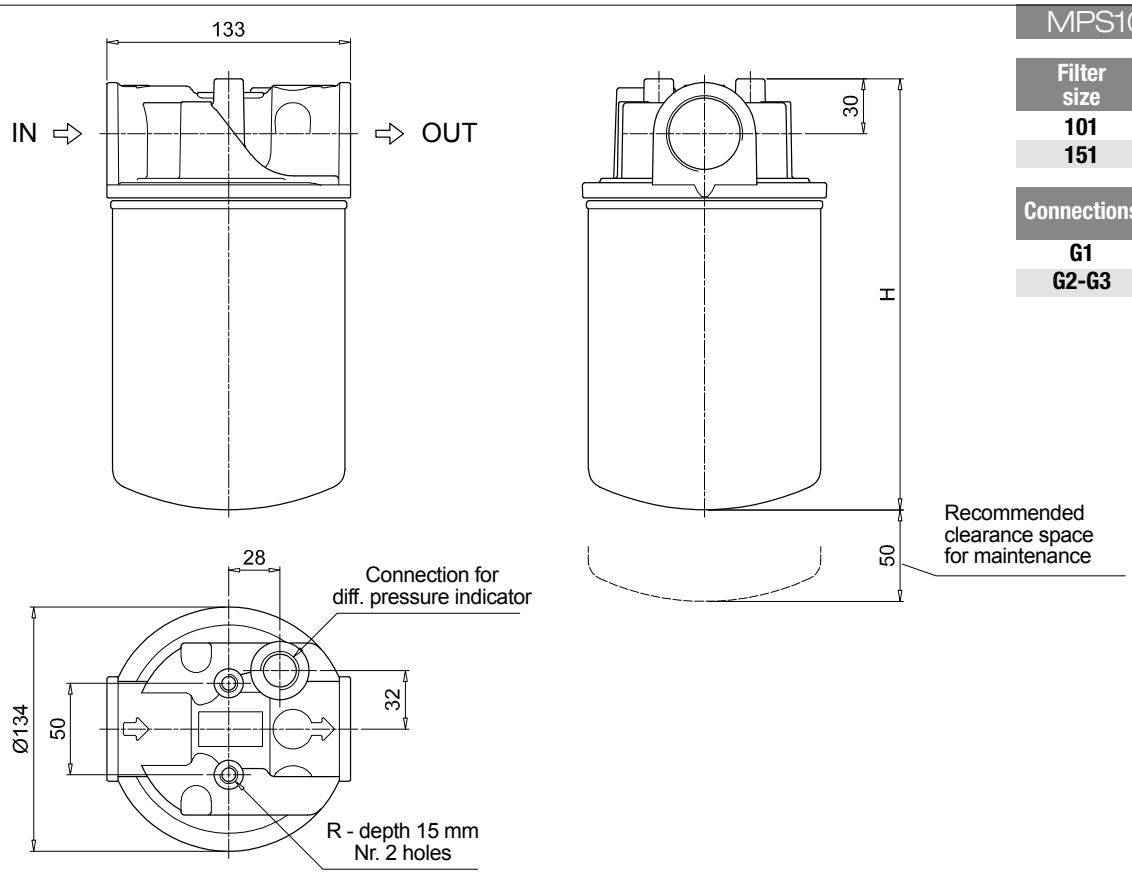

Filter size	H [mm]
101	246
151	295

Connections	R
G1	M8
G2-G3	5/16" UNC

MPS MPS200 - MPS250

Designation & Ordering code

COMPLETE FILTER

Configuration example : MPS200 | R | G1 | A10 | A | P01

Series and size

MPS200 | **MPS250**

Bypass valve

R	Inline / Return: with bypass 1.75 bar
S	Inline / Suction: with bypass 0.3 bar
U	Without bypass

Connections

G1	G 1 1/2”
G2	1 1/2” NPT
G3	SAE 24 - 1 7/8” - 12 UN

Filtration rating (filter media)

A03	Inorganic microfiber	3 µm	**M25**	Wire mesh	25 µm
A06	Inorganic microfiber	6 µm	**M60**	Wire mesh	60 µm
A10	Inorganic microfiber	10 µm	**M90**	Wire mesh	90 µm
A25	Inorganic microfiber	25 µm	**P10**	Resin impregnated paper	10 µm
			P25	Resin impregnated paper	25 µm

Seal

A	NBR

Execution

P01	MP Filtri standard

CARTRIDGE

Configuration example: CS100 | A10 | A | P01

Cartridge series and size

CS100 | **CS150**

Filtration rating (filter media)

A03	Inorganic microfiber	3 µm	**M25**	Wire mesh	25 µm
A06	Inorganic microfiber	6 µm	**M60**	Wire mesh	60 µm
A10	Inorganic microfiber	10 µm	**M90**	Wire mesh	90 µm
A25	Inorganic microfiber	25 µm	**P10**	Resin impregnated paper	10 µm
			P25	Resin impregnated paper	25 µm

Seals

A	NBR

Execution

P01	MP Filtri standard
Pxx	Customized

CLOGGING INDICATORS

See pages 781-783

Clogging indicators on RETURN line

BVA	Axial pressure gauge
BVR	Radial pressure gauge
BVP	Visual pressure indicator with automatic reset
BVQ	Visual pressure indicator with manual reset
BEA	Electrical pressure indicator
BEM	Electrical pressure indicator
BET	Electrical pressure indicator
BLA	Electrical / visual pressure indicator

Clogging indicators on SUCTION line

VVB	Axial pressure gauge
VVS	Radial pressure gauge
VEB	Electrical vacuum indicator
VLB	Electrical / visual vacuum indicator

MPS200 - MPS250

Filter size	H [mm]
200	213
250	262

Connections	T	R
G1	G 1/8"	M10
G2-G3	1/8" NPT	7/16" UNC

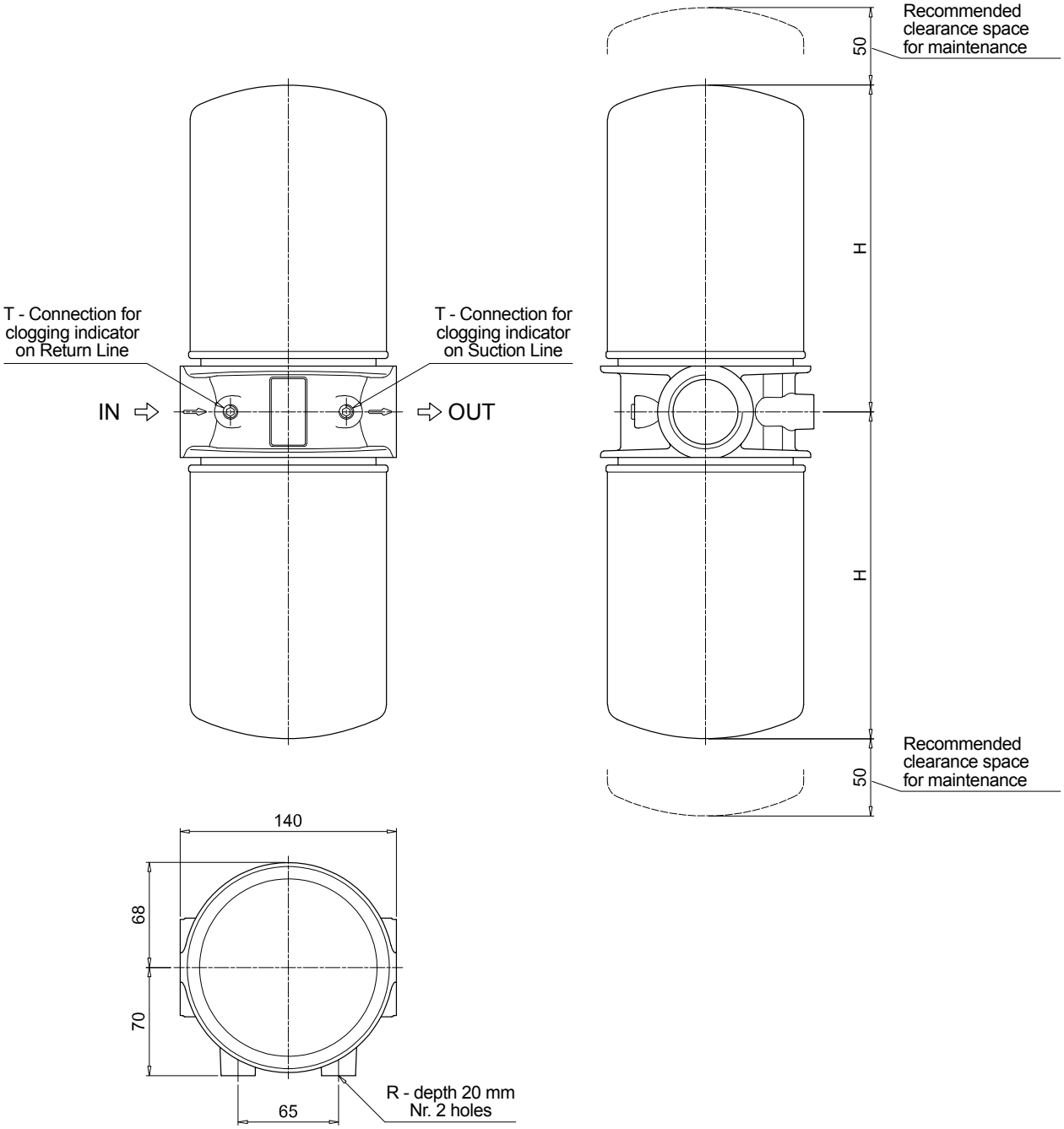

MPS MPS300 - MPS350 MPS301 - MPS351

Designation & Ordering code

COMPLETE FILTER

Configuration example : MPS300 | R | F1 | A10 | A | P01

Series and size

MPS300 | **MPS350**	With connections for clogging indicators
MPS301 | **MPS351**	With connections for differential pressure indicators

Bypass valve

		MPS 300 - 350	MPS 301 - 351
R	Inline / Return: with bypass 1.75 bar	•	•
S	Inline / Suction: with bypass 0.3 bar	•	-
U	Without bypass	•	-
P	Without bypass	-	•

Connections

G1	G 1 1/2”
G2	1 1/2” NPT
G3	SAE 24 - 1 7/8” - 12 UN
F1	1 1/2” SAE 3000 psi/M
F2	1 1/2” SAE 3000 psi/UNC

Filtration rating (filter media)

A03	Inorganic microfiber	3 µm	**M25**	Wire mesh	25 µm
A06	Inorganic microfiber	6 µm	**M60**	Wire mesh	60 µm
A10	Inorganic microfiber	10 µm	**M90**	Wire mesh	90 µm
A25	Inorganic microfiber	25 µm	**P10**	Resin impregnated paper	10 µm
			P25	Resin impregnated paper	25 µm

Seal

A	NBR

Execution

P01	MP Filtri standard

CARTRIDGE

Configuration example: CS100 | A10 | A | P01

Cartridge series and size

CS100 | CS150

Filtration rating (filter media)

A03	Inorganic microfiber	3 µm	**M25**	Wire mesh	25 µm
A06	Inorganic microfiber	6 µm	**M60**	Wire mesh	60 µm
A10	Inorganic microfiber	10 µm	**M90**	Wire mesh	90 µm
A25	Inorganic microfiber	25 µm	**P10**	Resin impregnated paper	10 µm
			P25	Resin impregnated paper	25 µm

Seals

A	NBR

Execution

P01	MP Filtri standard
Pxx	Customized

CLOGGING INDICATORS

See pages 781-783

Clogging indicators on RETURN line

BVA	Axial pressure gauge	**BEA**	Electrical pressure indicator
BVR	Radial pressure gauge	**BEM**	Electrical pressure indicator
BVP	Visual pressure indicator with automatic reset	**BET**	Electrical pressure indicator
BVQ	Visual pressure indicator with manual reset	**BLA**	Electrical / visual pressure indicator

Clogging indicators on SUCTION line

VVB	Axial pressure gauge	**VEB**	Electrical vacuum indicator
VVS	Radial pressure gauge	**VLB**	Electrical / visual vacuum indicator

Differential pressure indicators

DEA	Electrical differential pressure indicator	**DTA**	Electronic differential pressure indicator
DEM	Electrical differential pressure indicator	**DTI**	I-O Link electronic differential pressure indicator
DEU	Electrical differential pressure indicator	**DVA**	Visual differential pressure indicator
DLA	Electrical / visual differential pressure indicator	**DVM**	Visual differential pressure indicator
DLE	Electrical / visual differential pressure indicator		

PLUGS

See page 807

T2	Plug (not included)

MPS300 - MPS350

Filter size	H [mm]
300	266
350	315

Connections	T	R
G1	G 1/8"	M10
G2-G3	1/8" NPT	7/16" UNC
F1	G 1/8"	M10
F2	1/8" NPT	7/16" UNC

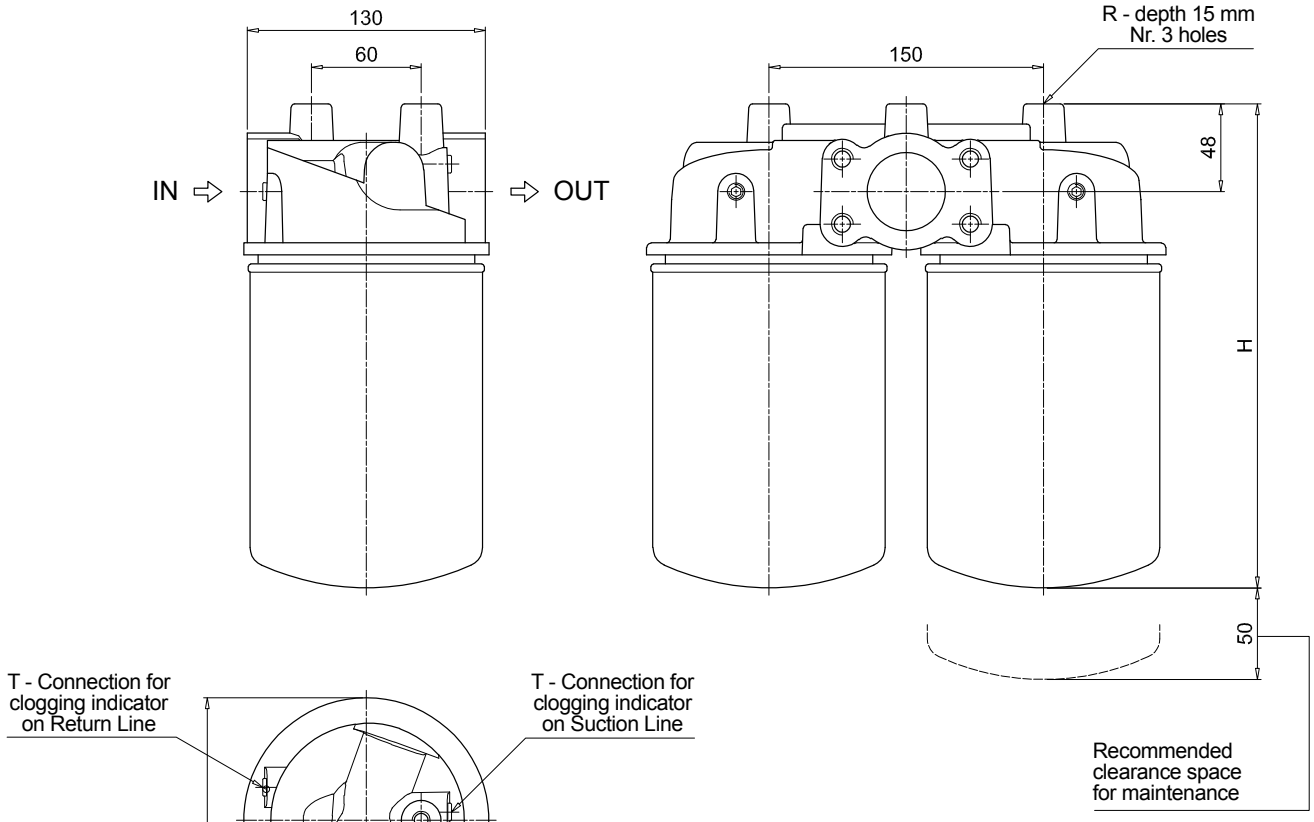

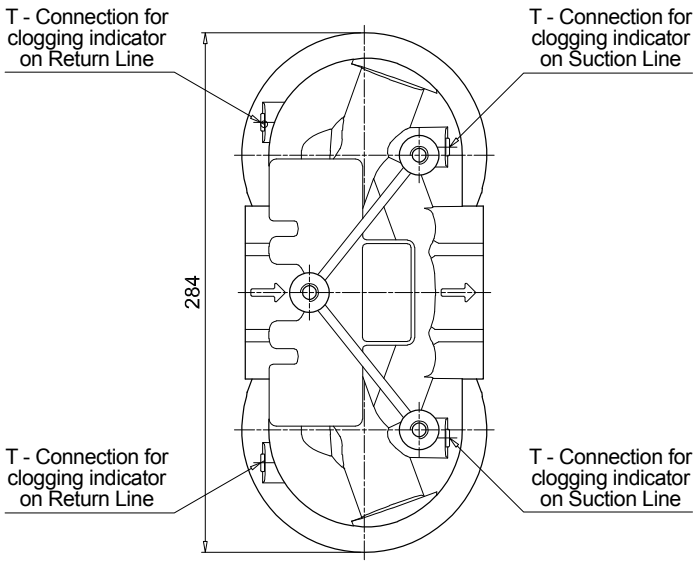

Dimensions

MPS301 - MPS351

Filter size	H [mm]
301	266
351	315

Connections	R
G1	M10
G2-G3	7/16" UNC
F1	M10
F2	7/16" UNC

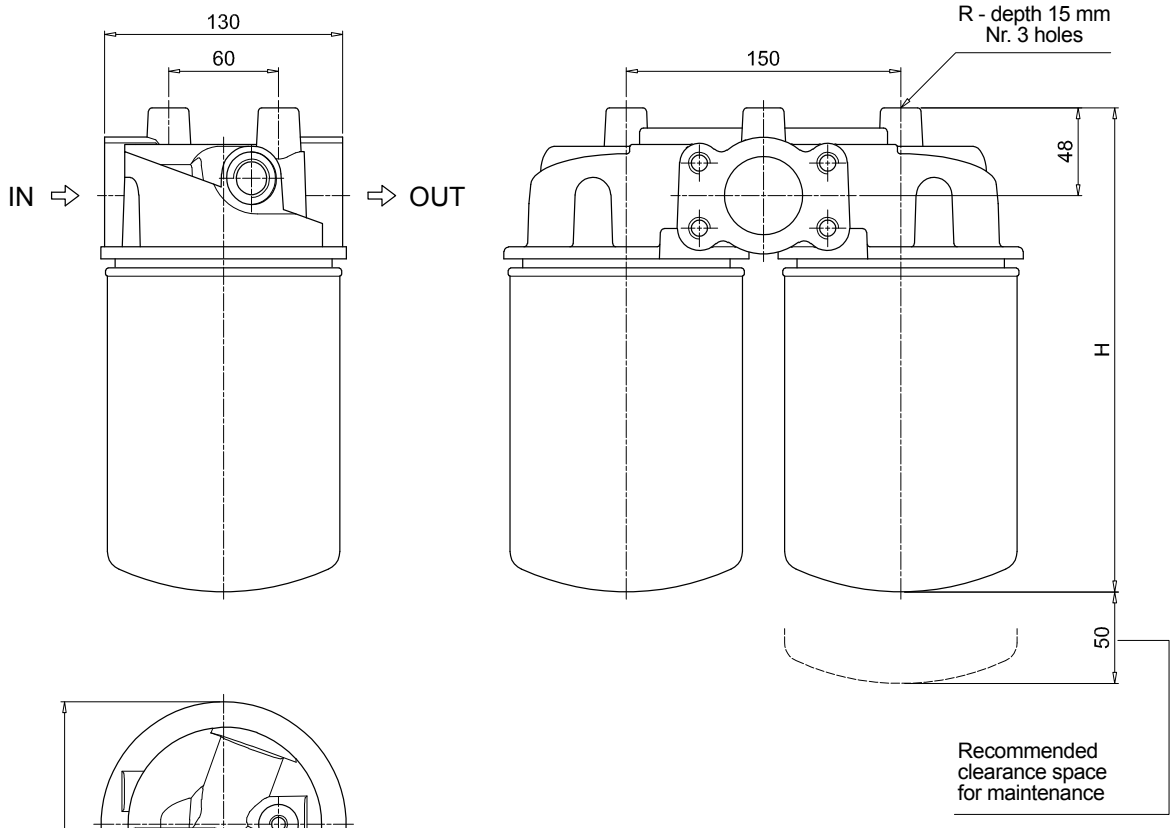

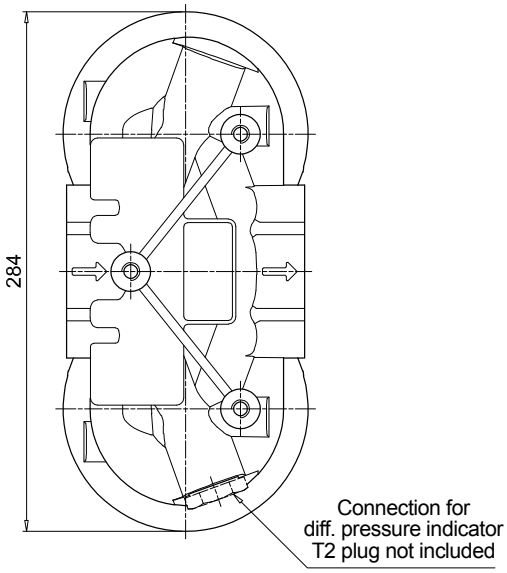

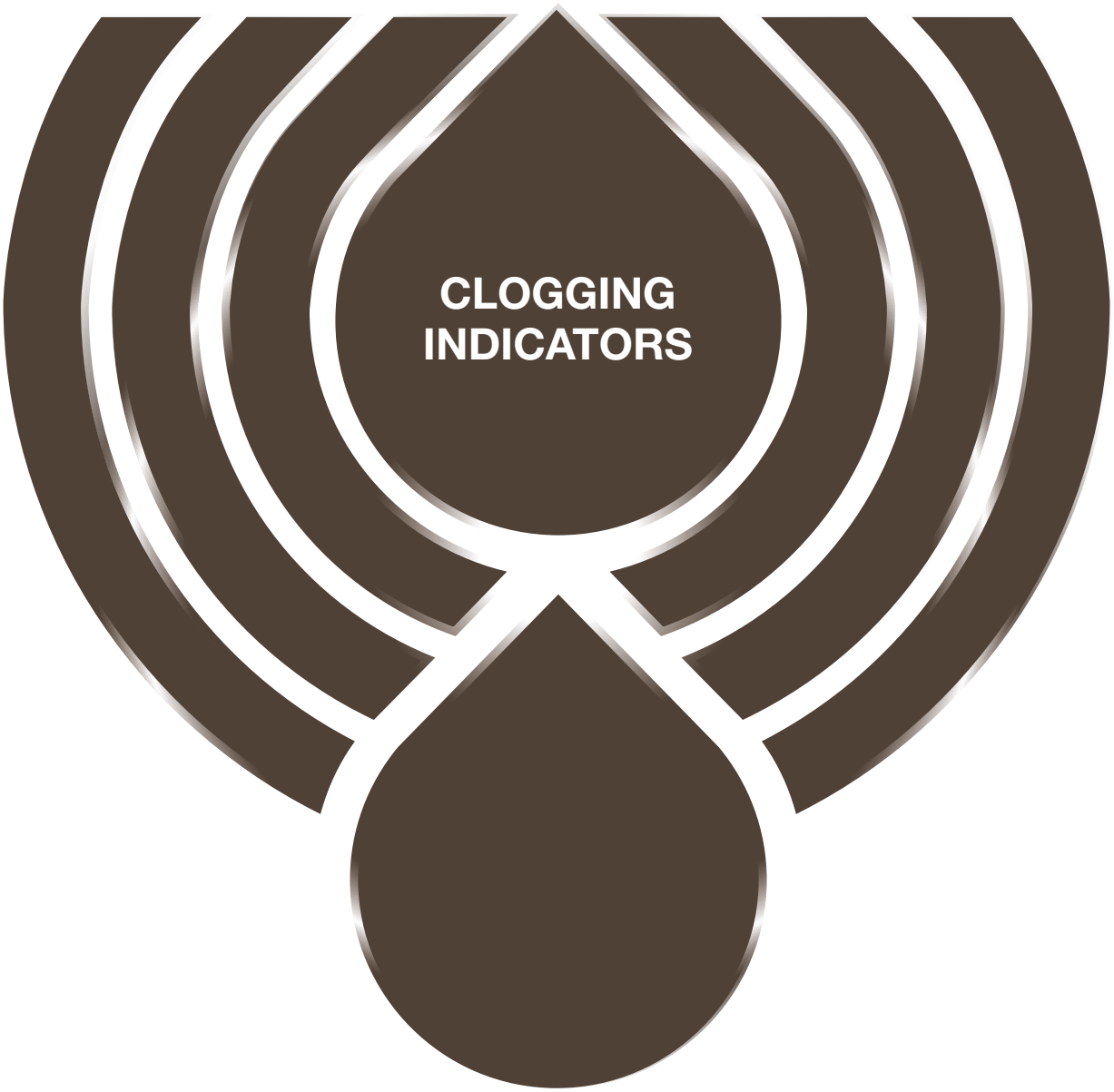
CLOGGING
INDICATORS

Clogging indicators are devices that check the life time of the filter elements. They measure the pressure drop through the filter element directly connected to the filter housing.
These devices trip when the clogging of the filter element causes a pressure drop increasing across the filter element.
Filter elements are efficient only if their Dirt Holding Capacity is fully exploited. This is achieved by using filter housings equipped with clogging indicators.
The indicator is set to alarm before the element becomes fully clogged.

MP Filtri can supply indicators of the following designs:
- Vacuum switches and gauges
- Pressure switches and gauges
- Differential pressure indicators

These type of devices can be provided with a visual, electrical or both signals. The electronic differential pressure clogging indicator is also available. It provides both analogical 4-20 mA output and digital warning (75% of clogging) and alarm (clogging) outputs.

In the following pages you can find a reference guide about the types of clogging indicators available in the different families of MP Filtri's Hydraulic Filtration range of products.

Clogging Indicators



DESIGNATION, ORDERING CODES & TECHNICAL DATA

INDEX

	Page
QUICK REFERENCE GUIDE	770
CLOGGING INDICATORS ORDERING CODES	
SUCTION FILTERS INDICATORS	775
RETURN FILTERS INDICATORS	776
RETURN / SUCTION FILTERS INDICATORS	778
SPIN-ON FILTERS INDICATORS	781
LOW & MEDIUM PRESSURE FILTERS INDICATORS	784
HIGH CAPACITY INDUSTRIAL FILTERS INDICATORS	785
HIGH PRESSURE FILTERS INDICATORS	786
STAINLESS STEEL HIGH PRESSURE FILTERS INDICATORS	787
FILTERS FOR POTENTIALLY EXPLOSIVE ATMOSPHERE INDICATORS	788
TECHNICAL DATA	
VACUUM INDICATORS	790
BAROMETRIC (PRESSURE) INDICATORS	792
DIFFERENTIAL PRESSURE INDICATORS	796
PLUGS	807

QUICK REFERENCE GUIDE

Ordering codes

Filter family	Filter series		Visual indicators	Electrical indicators	Electronic / Electrical-Visual indicators
SUCTION FILTERS		ELIXIR® SFEX 060-110	VVB20P01 VVS20P01	VEB21AA50P01	VLB21AA51P01 VLB21AA52P01 VLB21AA53P01 VLB21AA71P01
SUCTION FILTERS	Suction Line	SFMC250	VVA20P01 VVR20P01	VEA21xA50P01 VEA21xA50P01UL	VLA21xA51P01 VLA21xA52P01 VLA21xA53P01 VLA21xA71P01
SUCTION FILTERS	Without bypass	SFSC 500 - 503 - 504 - 505 SFSC 510 - 535 - 540	VVA20P01 VVR20P01	VEA21xA50P01 VEA21xA50P01UL	VLA21xA51P01 VLA21xA52P01 VLA21xA53P01 VLA21xA71P01
RETURN FILTERS	With bypass 1.75 bar	ELIXIR® RFEX 060-110	BVA14P01 BVR14P01 BVP15HP01 BVQ15HP01	BEA15HA50P01 BEA15HA50P01UL BEM15HA41P01	BLA15HA51P01 BLA15HA52P01 BLA15HA53P01 BLA15HA71P01
RETURN FILTERS	Without bypass	ELIXIR® RFEX 060-110	BVA25P01 BVR25P01 BVP20HP01 BVQ20HP01	BEA20HA50P01 BEA20HA50P01UL BEM20HA41P01	BLA20HA51P01 BLA20HA52P01 BLA20HA53P01 BLA20HA71P01
RETURN FILTERS	With bypass 1.75 bar	MDHC 250	BVA14P01 BVR14P01 BVP15HP01 BVQ15HP01 DVS12HP01	BEA15HA50P01 BEA15HA50P01UL BEM15HA41P01 DES12HA10P01 DES12HA30P01 DES12HA80P01	BLA15HA51P01 BLA15HA52P01 BLA15HA53P01 BLA15HA71P01
RETURN FILTERS	With bypass 3 bar	MDHC 250	BVA25P01 BVR25P01 BVP20HP01 BVQ20HP01 DVS25HP01	BEA20HA50P01 BEA20HA50P01UL BEM20HA41P01 BET20HF10P01 BET20HF30P01 BET25HF10P01 BET25HF30P01 DES25HA10P01 DES25HA30P01 DES25HA80P01	BLA20HA51P01 BLA20HA52P01 BLA20HA53P01 BLA20HA71P01
RETURN FILTERS	With bypass 1.75 bar	MPFX MPTX MPHC	BVA14P01 BVR14P01 BVP15HP01 BVQ15HP01	BEA15HA50P01 BEA15HA50P01UL BEM15HA41P01	BLA15HA51P01 BLA15HA52P01 BLA15HA53P01 BLA15HA71P01
RETURN FILTERS	With bypass 3 bar With bypass 2.5 bar	MPFX MPTX MPHC	BVA25P01 BVR25P01 BVP20HP01 BVQ20HP01	BEA20HA50P01 BEA20HA50P01UL BEM20HA41P01 BET20HF10P01 BET20HF30P01	BLA20HA51P01 BLA20HA52P01 BLA20HA53P01 BLA20HA71P01
RETURN FILTERS	With bypass 4.5 bar Return line	MPLX FRIC 025 - 040 - 100 - 250 - 630 - 850	DVA20xP01 DVM20xP01	DEA20xA50P01 DEM20xx10P01 DEM20xx20P01 DEM20xx30P01 DEM20xx35P01 DEU20VA50P01UL	DLA20xA51P01 DLA20xA52P01 DLA20xA71P01 DLE20xA50P01 DLE20xF50P01 DTA20xF70P01 DTI20xA70P01
RETURN FILTERS	Return line	FRIC 255	BVA25P01 BVR25P01 BVP20HP01 BVQ20HP01	BEA20HA50P01 BEA20HA50P01UL BEM20HA41P01	BLA20HA51P01 BLA20HA52P01 BLA20HA53P01 BLA20HA71P01

Ordering codes

Filter family	Filter series		Visual indicators	Electrical indicators	Electronic / Electrical-Visual indicators
RETURN / SUCTION FILTERS	With bypass 2.5 bar	MRSX 116 - 165 - 166 Suction line	VVB20P01 VVS20P01	VEB21AA50P01	VLB21AA51P01 VLB21AA52P01 VLB21AA53P01 VLB21AA71P01
		MRSX 116 - 165 - 166 Return line	BVA25P01 BVR25P01 BVP20HP01 BVQ20HP01	BEA20HA50P01 BEA20HA50P01UL BEM20HA41P01 BET25HF10P01 BET25HF30P01 BET25HF50P01	BLA20HA51P01 BLA20HA52P01 BLA20HA53P01 BLA20HA71P01
	With bypass 2.5 bar	LMP 124 MULTIPORT	BVA25P01 BVR25P01 BVP20HP01 BVQ20HP01 DVA20xP01 DVM20xP01	BEA20HA50P01 BEA20HA50P01UL BEM20HA41P01 BET25HF10P01 BET25HF30P01 BET25HF50P01 DEA20xA50P01 DEM20xx10P01 DEM20xx20P01 DEM20xx30P01 DEM20xx35P01 DEU20VA50P01UL	BLA20HA51P01 BLA20HA52P01 BLA20HA53P01 BLA20HA71P01 DLA20xA51P01 DLA20xA52P01 DLA20xA71P01 DLE20xA50P01 DLE20xF50P01 DTA20xF70P01 DTI20xA70P01
SPIN-ON FILTERS	Suction line	MPS 050 - 070 - 100 - 150 MPS 200 - 250 - 300 - 350	VVB20P01 VVS20P01	VEB21AA50P01	VLB21AA51P01 VLB21AA52P01 VLB21AA53P01 VLB21AA71P01
	Return line	MPS 050 - 070 - 100 - 150 MPS 200 - 250 - 300 - 350	BVA14P01 BVR14P01 BVP15HP01 BVQ15HP01	BEA15HA50P01 BEA15HA50P01UL BEM15HA41P01	BLA15HA51P01 BLA15HA52P01 BLA15HA53P01 BLA15HA71P01
	In-line	MPS 051 - 071 - 101 - 151 MPS 301 - 351	DVA12xP01 DVM12xP01 DVA20xP01 DVM20xP01	DEA12xA50P01 DEM12xAxxP01 DEA20xA50P01 DEM20xAxxP01 DEU20VA50P01UL	DLA12xA51P01 DLA12xA52P01 DLA12xA71P01 DLA20xA51P01 DLA20xA52P01 DLA20xA71P01 DLE12xA50P01 DLE12xF50P01 DLE20xF50P01 DLE20xF50P01 DTA12xF70P01 DTA20xF70P01 DTI12xA70P01 DTI20xA70P01

QUICK REFERENCE GUIDE

Ordering codes

Filter family	Filter series		Visual indicators	Electrical indicators	Electronic / Electrical-Visual indicators
LOW & MEDIUM PRESSURE FILTERS		ELIXIR® HFEX 060-110	DVS25HP01	DES25HA50P01	
		ELIXIR® LFEX 060-080-110-160	DVS25HP01	DES25HA10P01 DES25HA30P01 DES25HA50P01 DES25HA80P01	
	With bypass 3.5 bar	LMP 110 LMP 112 - 116 - 118 - 119 MULTIPORT LMP 120 - 122 - 123 MULTIPORT LMP 210 - 211 - LDP LMP 400 - 401 & 430 - 431 LMP 900 - 901 LMP 902 - 903 LMP 950 - 951 LMP 952 - 953 - 954 LMD 211 - 400 - 401 - 431 - 951 - LDD	DVA20xP01 DVM20xP01	DEA20xA50P01 DEM20xx10P01 DEM20xx20P01 DEM20xx30P01 DEM20xx35P01 DEU20VA50P01UL	DLA20xA51P01 DLA20xA52P01 DLA20xA71P01 DLE20xA50P01 DLE20xF50P01 DTA20xF70P01 DTI20xA70P01
	With bypass 2.5 bar	LPH 630	DVA20xP01 DVM20xP01	DEA20xA50P01 DEM20xx10P01 DEM20xx20P01 DEM20xx30P01 DEM20xx35P01 DEU20VA50P01UL	DLA20xA51P01 DLA20xA52P01 DLA20xA71P01 DLE20xA50P01 DLE20xF50P01 DTA20xF70P01 DTI20xA70P01
	With bypass 1.75 bar	LPH 630	DVA12xP01 DVM12xP01	DEA12xA50P01 DEM12xx10P01 DEM12xx20P01 DEM12xx30P01 DEM12xx35P01	DLA12xA51P01 DLA12xA52P01 DLA12xA71P01 DLE12xA50P01 DLE12xF50P01 DTA12xF70P01 DTI12xA70P01
	Without bypass	ELIXIR® HFEX 060-110	DVS40HP01	DES40HA50P01	
		ELIXIR® LFEX 060-080-110-160	DVS40HP01	DES40HA10P01 DES40HA30P01 DES40HA50P01 DES40HA80P01	
	Without bypass	LMP 110 LMP 112 - 116 - 118 - 119 MULTIPORT LMP 120 - 122 - 123 MULTIPORT LMP 210 - 211 - LDP LMP 400 - 401 & 430 - 431 LMP 900 - 901 LMP 902 - 903 LMP 950 - 951 LMP 952 - 953 - 954 LMD 211 - 400 - 401 - 431 - 951 - LDD LPH 630	DVA50xP01 DVM50xP01	DEA50xA50P01 DEM50xx10P01 DEM50xx20P01 DEM50xx30P01 DEM50xx35P01 DEU50VA50P01UL	DLA50xA51P01 DLA50xA52P01 DLA50xA71P01 DLE50xA50P01 DLE50xF50P01 DTA50xF70P01 DTI50xA70P01
HIGH CAPACITY INDUSTRIAL FILTERS	With bypass 3.5 bar	MLPX MLDX	DVA20xP01 DVM20xP01	DEA20xA50P01 DEM20xx10P01 DEM20xx20P01 DEM20xx30P01 DEM20xx35P01v	DLA20xA51P01 DLA20xA52P01 DLA20xA71P01 DLE20xA50P01 DLE20xF50P01 DTA20xF70P01 DTI20xA70P01
	With bypass 1.75 bar	MLPC MLDC	DVA12xP01 DVM12xP01	DEA12xA50P01 DEM12xx10P01 DEM12xx20P01 DEM12xx30P01 DEM12xx35P01	DLA12xA51P01 DLA12xA52P01 DLA12xA71P01 DLE12xA50P01 DLE12xF50P01 DTA12xF70P01 DTI12xA70P01
	Without bypass	MLDC MLPC	DVA50xP01 DVM50xP01	DEA50xA50P01 DEM50xx10P01 DEM50xx20P01 DEM50xx30P01 DEM50xx35P01	DLA50xA51P01 DLA50xA52P01 DLA50xA71P01 DLE50xA50P01 DLE50xF50P01 DTA50xF70P01 DTI50xA70P01

Ordering codes

Filter family	Filter series		Visual indicators	Electrical indicators	Electronic / Electrical-Visual indicators
HIGH PRESSURE FILTERS	With bypass 6 bar	FMP 039 - 065 - 135 - 320 FHP 010 - 011 - 065 - 135 - 350 - 351 - 500 FMMX 050 - 150 FMM 050 - 150 FHA 051 FHM 050 - 065 - 135 - 320 - 500 FHB 050 - 135 - 320 FHF 325 FHD 051 - 326 - 333	DVA50xP01 DVM50xP01	DEA50xA50P01 DEM50xx10P01 DEM50xx20P01 DEM50xx30P01 DEM50xx35P01 DEU50VA50P01UL	DLA50xA51P01 DLA50xA52P01 DLA50xA71P01 DLE50xA50P01 DLE50xF50P01 DTA50xF70P01 DTI50xA70P01
	Without bypass	FMP 039 - 065 - 135 - 320 FHP 010 - 011 - 065 - 135 - 350 - 351 - 500 FMMX 050 - 150 FMM 050 - 150 FHA 051 FHM 006 - 007 - 010 - 050 - 065 - 135 - 320 - 500 FHB 050 - 135 - 320 FHF 325 FHD 021 - 051 - 326 - 333	DVA70xP01 DVA95xP01 DVM70xP01 DVM95xP01	DEA70xA50P01 DEA95xA50P01 DEM70xx10P01 DEM70xx20P01 DEM70xx30P01 DEM70xx35P01 DEU70VA50P01UL DEM95xx10P01 DEM95xx20P01 DEM95xx30P01 DEM95xx35P01	DLA70xA51P01 DLA70xA52P01 DLA70xA71P01 DLA95xA51P01 DLA95xA52P01 DLA95xA71P01 DLE70xA50P01 DLE70xF50P01 DLE95xA50P01 DLE95xF50P01 DTA70xF70P01 DTA95xF70P01 DTI70xA70P01 DTI95xA70P01
STAINLESS STEEL HIGH PRESSURE FILTERS	With bypass 6 bar	FZH 012 - 040	DVZ50xP01	DEZ50xA50P01	DLZ50xA51P01 DLZ50xA52P01
	Without bypass	FZH 012 - 040	DVZ70xP01 DVZ95xP01	DEZ70xA50P01 DEZ95xA50P01	DLZ70xA51P01 DLZ70xA52P01 DLZ95xA51P01 DLZ95xA52P01
	With bypass 6 bar	FZP 039 - 136 FZB 039 FZM 039 FZD 051	DVX50xP01 DVY50xP01	DEX50xA50P01	DLX50xA51P01 DLX50xA52P01
	Without bypass	FZP 039 - 136 FZB 039 FZM 039 FZD 010 - 021 - 051	DVX70xP01 DVX95xP01 DVY70xP01 DVY95xP01	DEX70xA50P01 DEX95xA50P01	DLX70xA51P01 DLX70xA52P01 DLX95xA51P01 DLX95xA52P01
FILTERS FOR POTENTIALLY EXPLOSIVE ATMOSPHERE	With bypass 6 bar	FMMX 050 - 150	DVA50xP01 DVM50xP01	DEH50xA48P01 DEH50xA49P01 DEH50xA70P01	
	Without bypass	FMMX 050 - 150	DVA70xP01 DVA95xP01 DVM70xP01 DVM95xP01	DEH70xA48P01 DEH70xA49P01 DEH70xA70P01	
	With bypass 6 bar	FZP 039 - 136	DVX50xP01 DVY50xP01	DEH50xA48P01 DEH50xA49P01 DEH50xA70P01	
	Without bypass	FZP 039 - 136	DVX70xP01 DVX95xP01 DVY70xP01 DVY95xP01	DEH70xA48P01 DEH70xA49P01 DEH70xA70P01	
	With bypass 6 bar	FZH 012 - 040	DVZ50xP01		
	Without bypass	FZH 012 - 040	DVZ70xP01 DVZ95xP01		

Suitable indicator types

V ACUUM INDICATORS

Vacuum indicators are used on the Suction line to check the efficiency of the filter element.
They measure the pressure downstream of the filter element.
Standard items are produced with R 1/4" EN 10226 connection.
Available products with R 1/8" EN 10226 to be fitted on MPS series.
Vacuum indicators are identified in the Hydraulic Filtration catalogue and in the Quick Reference Guide table by the letter "V".

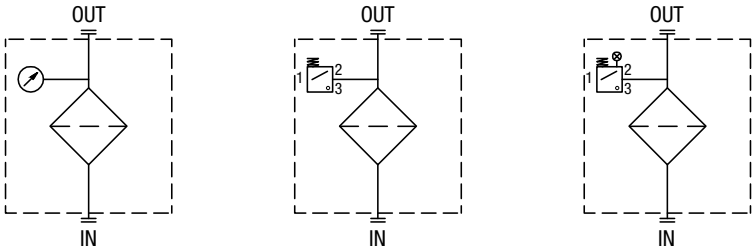

Example:
V VVB20P01

B AROMETRIC (PRESSURE) INDICATORS

Pressure indicators are used on the Return line to check the efficiency of the filter element.
They measure the pressure upstream of the filter element.
Standard items are produced with R 1/8" EN 10226 connection.
Barometric (pressure) indicators are identified in the Hydraulic Filtration catalogue and in the Quick Reference Guide table by the letter "B"

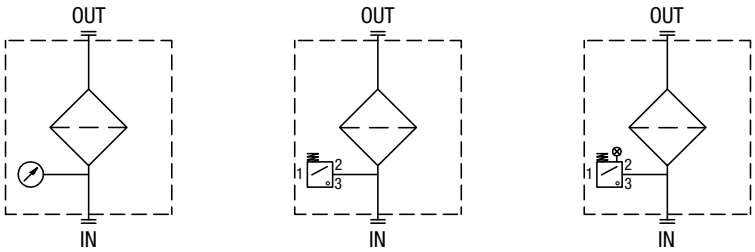

Example:
B BVA14P01

D IFFERENTIAL PRESSURE INDICATORS

Differential pressure indicators are used on the Pressure line to check the efficiency of the filter element.
They measure the pressure upstream and downstream of the filter element (differential pressure).
Standard items are produced with special connection G 1/2" size.
Also available in Stainless Steel models.
Differential pressure indicators are identified in the Hydraulic Filtration catalogue and in the Quick Reference Guide table by the letter "D"

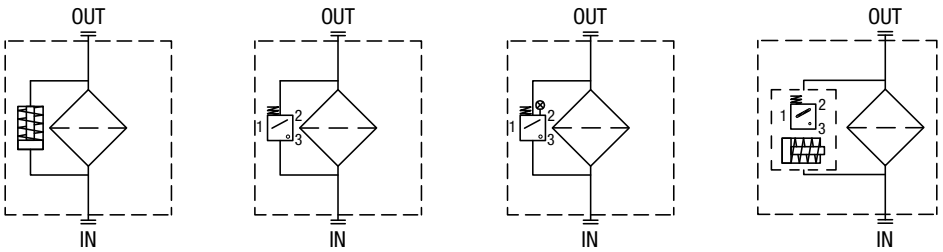

Example:
D DVA20xP01

APPLICABLE VACUUM INDICATORS BY FILTER SERIES

Filter Series	VEA	VEB	VLA	VLB	VVA	VVB	VVR	VVS
MPS	-	•	-	•	-	•	-	•

VACUUM INDICATORS

Configuration example 1:	VE	B	21	A	A	50	P01	EX
Configuration example 2:	VL	B	21	A	A	71	P01	
Configuration example 3:	VV	S	20				P01	

Series
- **VE** Electrical vacuum indicator
- **VL** Electrical/Visual vacuum indicator
- **VV** Vacuum gauge

Type VE - VL
- **B** Connection EN 10226 - R1/8”

Type VV
- **B** Axial connection EN 10226 - R1/8”
- **S** Radial connection EN 10226 - R1/8”

Vacuum setting	VE	VL	VVB	VVS
20 0.20 bar	-	-	•	•
21 0.21 bar	•	•	-	-

Seals	VEB - VLB	VV
A NBR	•	-
V FPM	-	-

Thermostat	VE	VL	VV
A Without	•	•	-

Electrical connections	VE	VL
50 Connection EN 175301-803	•	-
51 Connection EN 175301-803, transparent base with lamps 24 Vdc	-	•
52 Connection EN 175301-803, transparent base with lamps 110 Vdc	-	•
53 Connection EN 175301-803, transparent base with lamps 230 Vac	-	•
71 Connection IEC 61076-2-101 D (M12), black base with lamps 24 Vdc	-	•

Option
- **P01** MP Filtri standard
- **Pxx** Customized

Certifications	VEB	VL	VV
Without	•	•	•
EX ATEX certification	•	-	-

Designation & Ordering code

APPLICABLE BAROMETRIC (PRESSURE) INDICATORS BY FILTER SERIES

Filter Series	BEA	BEM	BET	BLA	BVA	BVR	BVP	BVQ
MPS	•	•	•	•	•	•	•	•

BAROMETRIC (PRESSURE) INDICATORS

Configuration example 1:	BE	M	15	H	A	41	P01	EX
Configuration example 2:	BL	A	20	H	A	71	P01	
Configuration example 3:	BV	R	14				P01	
Configuration example 4:	BV	P	20	H			P01	

Series

BE Electrical pressure indicator
BL Electrical/Visual pressure indicator
BV Visual pressure indicator

Type	BE	BL
A Standard type	•	•
M With wired electrical connection	•	-

BV

A Axial connection pressure gauge
R Radial connection pressure gauge
P Visual indicator with automatic reset
Q Visual indicator with manual reset

Pressure setting	BEA-BEM	BET	BLA	BVA-BVR	BVP-BVQ
14 1.4 bar	-	-	-	•	-
15 1.5 bar	•	-	•	-	•
20 2.0 bar	•	•	•	-	•
25 2.5 bar	-	•	-	•	-

Seals	BE	BLA	BVA-BVR	BVP-BVQ
H HNBR	•	•	-	•

Thermostat	BEA-BEM	BET	BLA	BV
A Without thermostat	•	-	•	-
F With thermostat	-	•	-	-

Electrical connections	BEA	BEM	BL
10 Connection AMP Superseal series 1.5	-	-	-
30 Connection Deutsch DT-04-2-P	-	-	-
41 Connection via four-core cable	-	•	-
50 Connection EN 175301-803	•	-	-
51 Connection EN 175301-803, transparent base with lamps 24 Vdc	-	-	•
52 Connection EN 175301-803, transparent base with lamps 110 Vdc	-	-	•
53 Connection EN 175301-803, transparent base with lamps 230 Vac	-	-	•
71 Connection IEC 61076-2-101 D (M12), black base with lamps 24 Vdc	-	-	•

Option

P01 MP Filtri standard
Pxx Customized

Certifications	BEA	BEM-BET	BL	BV
Without	•	•	•	•
EX ATEX certification	•	-	-	-
UL UL certification	•	-	-	-

Designation & Ordering code

APPLICABLE DIFFERENTIAL PRESSURE INDICATORS BY FILTER SERIES

Filter Series	DEA	DEM	DEU	DLA	DLE	DTA	DTI	DVA	DVM
MPS	•	•	•	•	•	•	•	•	•

DIFFERENTIAL PRESSURE INDICATORS

Configuration example 1:	DE	M	12	H	F	50	P01	
Configuration example 2:	DE	U	50	V	A	50	P01	UL
Configuration example 3:	DL	E	20	V	A	71	P01	
Configuration example 4:	DT	A	50	H	F	70	P01	
Configuration example 5:	DV	M	70	V			P01	

Series

DE Electrical differential pressure indicator
DL Electrical/Visual differential pressure indicator
DT Electronic differential pressure indicator
DV Visual differential pressure indicator

Type

		DE	DL	DT
A	Standard type	•	•	•
I	I-O Link type	-	-	•
M	With wired electrical connection	•	-	-
U	Standard type 210 bar, UL certified	•	-	-
E	For high power supply	-	•	-

DV

A	With automatic reset
M	With manual reset

Pressure setting

		DEA	DEM	DEU	DLA	DLE	DT	DVA	DVM
12	1.2 bar	•	•	-	•	•	•	•	•
20	2.0 bar	•	•	•	•	•	•	•	•

Seals

		DEA	DEM	DEU	DLA	DLE	DT	DVA	DVM
H	HNBR	•	•	-	•	•	•	•	•
V	FPM	•	•	•	•	•	•	•	•

Thermostat

		DEA	DEM	DEU	DLA	DLE	DTA	DTI
A	Without thermostat	•	•	•	•	•	-	•
F	With thermostat	-	•	-	-	•	•	-

Electrical connections

		DEA	DEM	DEU	DLA	DLE	DT
10	Connection AMP Superseal series 1.5	-	•	-	-	-	-
20	Connection AMP Timer Junior	-	•	-	-	-	-
30	Connection Deutsch DT-04-2-P	-	•	-	-	-	-
35	Connection Deutsch DT-04-3-P	-	•	-	-	-	-
50	Connection EN 175301-803	•	-	•	-	•	-
51	Connection EN 175301-803, transparent base with lamps 24 Vdc	-	-	-	•	-	-
52	Connection EN 175301-803, transparent base with lamps 110 Vdc	-	-	-	•	-	-
70	Connection IEC 61076-2-101 D (M12)	-	-	-	-	-	•
71	Connection IEC 61076-2-101 D (M12), black base with lamps 24 Vdc	-	-	-	•	-	-

Option

P01	MP Filtri standard
Pxx	Customized

Certifications

		DEU	OTHERS
	Without	-	•
UL	UL certification	•	-

PLUGS

Configuration example	T2	H	

Series

T2 Plug

Seals

H HNBR
V FPM

Technical data

VE*50 (EX)

Electrical Vacuum Indicator
Connection: EN 175301-803

R	Ordering code
EN 10226 - R1/4"	VE A 21 x A 50 P01
	VE A 21 x A 50 P01 EX
EN 10226 - R1/8"	VE B 21 A A 50 P01
	VE B 21 A A 50 P01 EX

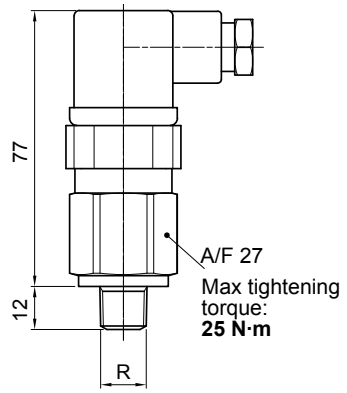

Hydraulic symbol

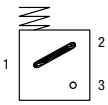

Electrical symbol

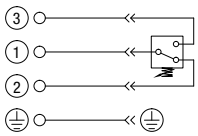

- Certification: ATEX, IECEx
- Certification included in EX version

Materials
- Body: Brass
- Base: Black polyamide
- Contacts: Silver
- Seal: VEA: NBR/FPM
  VEB: NBR

Technical data
- Vacuum setting: 0.21 bar ±10%
- Max working pressure: 10 bar
- Proof pressure: 15 bar
- Working temperature: From -25 °C to +80 °C
- Compatibility with fluids: Mineral oils, Synthetic fluids
  HFB and HFC according to ISO 2943
- Degree of protection: IP65 according to EN 60529

Electrical data
- Electrical connection: EN 175301-803
- Resistive load: 5 A / 14 Vdc
  4 A / 30 Vdc
  5 A / 125 Vac
  4 A / 250 Vac

VEA50 UL

Electrical Vacuum Indicator
Connection: EN 175301-803

R	Ordering code
EN 10226 - R1/4"	VE A 21 A A 50 P01 UL

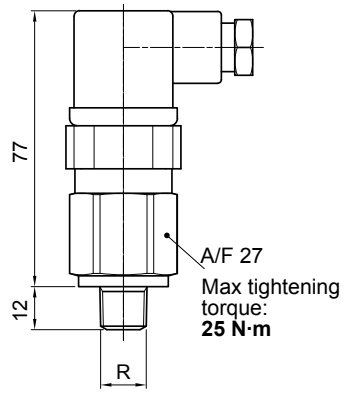

Hydraulic symbol

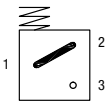

Electrical symbol

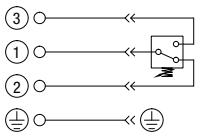

- Certification: UL
- Certification included as standard

Materials
- Body: Brass
- Base: Black polyamide
- Contacts: Silver
- Seal: VEA: NBR/FPM
  VEB: NBR

Technical data
- Vacuum setting: 0.21 bar ±10%
- Max working pressure: 10 bar
- Proof pressure: 15 bar
- Working temperature: From -25 °C to +80 °C
- Compatibility with fluids: Mineral oils, Synthetic fluids
  HFB and HFC according to ISO 2943
- Degree of protection: IP65 according to EN 60529

Electrical data
- Electrical connection: EN 175301-803
- Resistive load: 5 A / 14 Vdc
  4 A / 30 Vdc
  5 A / 125 Vac
  4 A / 250 Vac

VL*51 - VL*52 - VL*53

Electrical/Visual Vacuum Indicator
Connection: EN 175301-803

51: Transparent base with lamps 24 Vdc
52: Transparent base with lamps 110 Vdc
53: Transparent base with lamps 230 Vac

R	Ordering code
EN 10226 - R1/4"	VL A 21 x A xx P01
EN 10226 - R1/8"	VL B 21 A A xx P01

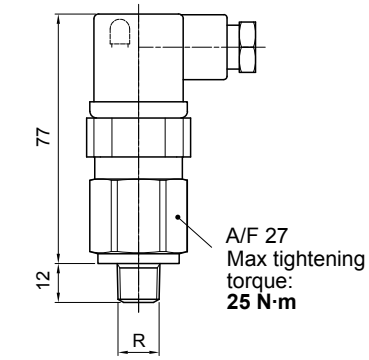

Hydraulic symbol

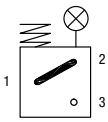

Electrical symbol

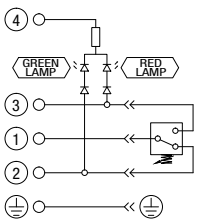

Materials
- Body: Brass
- Base: Transparent polyamide
- Contacts: Brass - Polyamide
- Seal: VLA: NBR/FPM
  VLB: NBR

Technical data
- Vacuum setting: 0.21 bar ±10%
- Max working pressure: 10 bar
- Proof pressure: 15 bar
- Working temperature: From -25 °C to +80 °C
- Compatibility with fluids: Mineral oils, Synthetic fluids
  HFB and HFC according to ISO 2943
- Degree of protection: IP65 according to EN 60529

Electrical data
- Electrical connection: EN 175301-803

- Type	51	52	53
- Lamps	24 Vdc	110 Vdc	230 Vac
- Resistive load:	1 A / 24 Vdc	1 A / 110 Vdc	1 A / 230 Vac

VL*71

Electrical/Visual Vacuum Indicator
Connection IEC 61076-2-101 D (M12), black base with lamps 24 Vdc

Connections	Indicator code
EN 10226 - R1/4"	VL A 21 x A 71 P01
EN 10226 - R1/8"	VL B 21 A A 71 P01

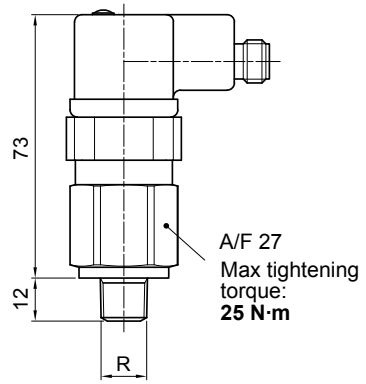

Hydraulic symbol

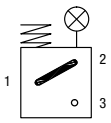

Electrical symbol

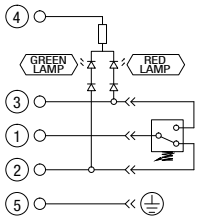

Materials
- Body: Brass
- Base: Black polyamide
- Contacts: Silver
- Seal: VLA: NBR/FPM; VLB: NBR

Technical data
- Vacuum setting: 0.21 bar ±10%
- Max working pressure: 10 bar
- Proof pressure: 15 bar
- Working temperature: From -25 °C to +80 °C
- Compatibility with fluids: Mineral oils, Synthetic fluids HFB and HFC according to ISO 2943
- Degree of protection: IP65 according to EN 60529

Electrical data
- Electrical connection: IEC 61076-2-101 D (M12)
- Lamps: 24 Vdc (black base)
- Resistive load: 0.4 A / 24 Vdc

VVA - VVB

Axial Vacuum Gauge

R	Ordering code
EN 10226 - R1/4"	VVA 20 P01
EN 10226 - R1/8"	VVB 20 P01

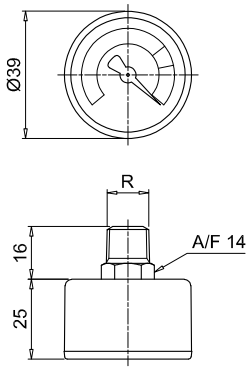

Hydraulic symbol



Dial scale

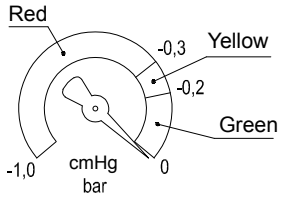

Conversion to SI units

[cmHg]	[bar]
-12	-0.16
-18	-0.24
-76	-1.01

Materials
- Case: Black plastic
- Window: Clear plastic
- Dial: White plastic
- Pointer: Black plastic
- Pressure connection: Cu-alloy
- Pressure element: Bourdon tube Cu-alloy soft soldered, C type
- Movement: Cu-alloy

Technical data
- Max working pressure: Steady: -0.7 bar; Fluctuating: -0.6 bar; Short time: -1.0 bar
- Working temperature: Ambienti from -40 °C to +60 °C; Fluid max + 60 °C; Storage from -40 °C to +60 °C
- Compatibility with fluids: Mineral oils, Synthetic fluids HFB and HFC according to ISO 2943
- Accuracy: Class 2.5 according to EN 13190
- Degree of protection: IP31 according to EN 60529

VVR - VVS

Radial Vacuum Gauge

R	A/F	Ordering code
EN 10226 - R1/4"	14	VVR 20 P01
EN 10226 - R1/8"	11	VVS 20 P01

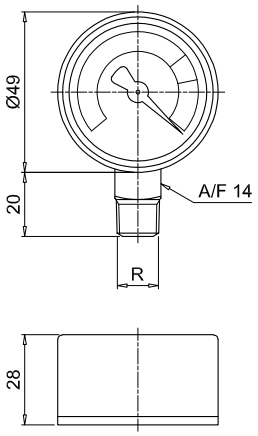

Hydraulic symbol



Dial scale

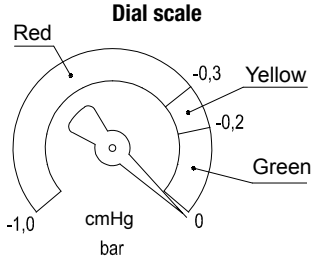

Conversion to SI units

[cmHg]	[bar]
-12	-0.16
-18	-0.24
-76	-1.01

Materials
- Case: Black plastic
- Window: Clear plastic
- Dial: White plastic
- Pointer: Black plastic
- Pressure connection: Cu-alloy
- Pressure element: Bourdon tube Cu-alloy soft soldered, C type
- Movement: Cu-alloy

Technical data
- Max working pressure: Steady: -0.7 bar; Fluctuating: -0.6 bar; Short time: -1.0 bar
- Working temperature: Ambienti from -40 °C to +60 °C; Fluid max + 60 °C; Storage from -40 °C to +60 °C
- Compatibility with fluids: Mineral oils, Synthetic fluids HFB and HFC according to ISO 2943
- Accuracy: Class 2.5 according to EN 13190
- Degree of protection: IP31 according to EN 60529

Dimensions

BEA*50 (EX)

Electrical Pressure Indicator
Connection EN 175301-803

Settings	Ordering code
1.5 bar ±10%	BE A 15 H A 50 P01
	BE A 15 H A 50 P01 EX
2.0 bar ±10%	BE A 20 H A 50 P01
	BE A 20 H A 50 P01 EX

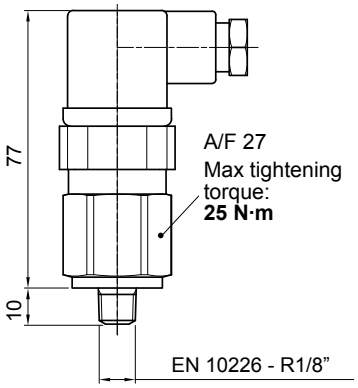

Hydraulic symbol

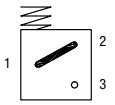

Electrical symbol

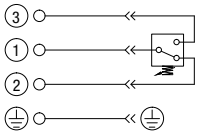

- Certification: ATEX, IECEx
- Certification included in EX version

Materials
- Body: Brass
- Base: Black polyamide
- Contacts: Silver
- Seal: HNBR

Technical data
- Max working pressure: 40 bar
- Proof pressure: 60 bar
- Working temperature: From -25 °C to +80 °C
- Compatibility with fluids: Mineral oils, Synthetic fluids HFB and HFC according to ISO 2943
- Degree of protection: IP65 according to EN 60529

Electrical data
- Electrical connection: EN 175301-803
- Resistive load: 5 A / 14 Vdc
  4 A / 30 Vdc
  5 A / 125 Vac
  4 A / 250 Vac

BEA*50 UL

Electrical Pressure Indicator
Connection EN 175301-803

Settings	Ordering code
1.5 bar ±10%	BE A 15 H A 50 P01 UL
2.0 bar ±10%	BE A 20 H A 50 P01 UL

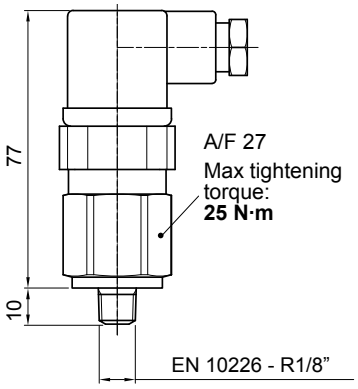

Hydraulic symbol

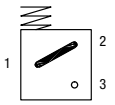

Electrical symbol

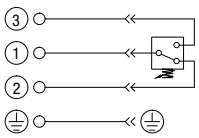

- Certification: UL
- Certification included as standard

Materials
- Body: Brass
- Base: Black polyamide
- Contacts: Silver
- Seal: HNBR

Technical data
- Max working pressure: 12 bar
- Proof pressure: 40 bar
- Working temperature: From -25 °C to +80 °C
- Compatibility with fluids: Mineral oils, Synthetic fluids HFB and HFC according to ISO 2943
- Degree of protection: IP65 according to EN 60529

Electrical data
- Electrical connection: EN 175301-803
- Resistive load: 5 A / 14 Vdc
  4 A / 30 Vdc
  5 A / 125 Vac
  4 A / 250 Vac

BEM*41

Electrical Pressure Indicator
Connection via four-core cable

Settings	Ordering code
1.5 bar ±10%	BE M 15 H A 41 P01
2.0 bar ±10%	BE M 20 H A 41 P01

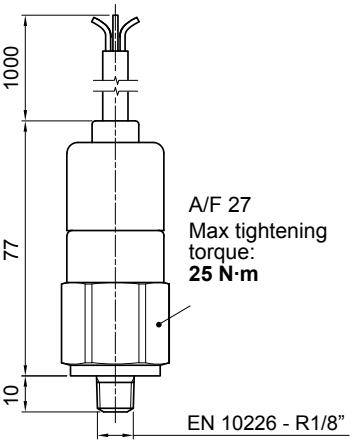

Hydraulic symbol

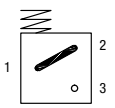

Electrical symbol

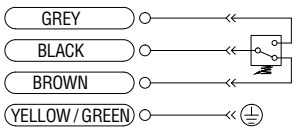

Materials
- Body: Brass
- Base: Black polyamide
- Contacts: Silver
- Seal: HNBR

Technical data
- Max working pressure: 40 bar
- Proof pressure: 60 bar
- Working temperature: From -25 °C to +80 °C
- Compatibility with fluids: Mineral oils, Synthetic fluids HFB and HFC according to ISO 2943
- Degree of protection: IP67 according to EN 60529

Electrical data
- Electrical connection: Four-core cable
- Resistive load: 5 A / 14 Vdc
  4 A / 30 Vdc
  5 A / 125 Vac
  4 A / 250 Vac
- CE certification

On request this indicator can be provided with main connectors in use for wirings.

BET*F10

Electrical Pressure Indicator
Connection AMP Superseal series 1.5

Settings	Ordering code
2.0 bar ±10%	BE T 20 H F 10 P01
2.5 bar ±10%	BE T 25 H F 10 P01

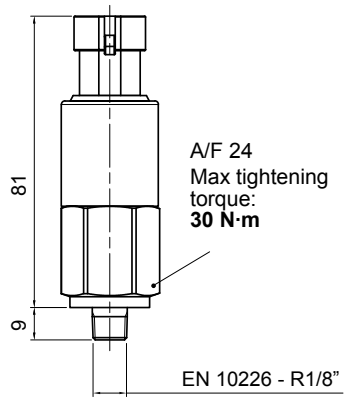

Hydraulic symbol

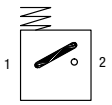

Electrical symbol

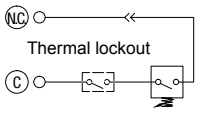

Materials
- Body: Brass
- Base: Black polyamide
- Contacts: Silver
- Seal: HNBR

Technical data
- Max working pressure: 10 bar
- Proof pressure: 15 bar
- Working temperature: From -25 °C to +100 °C
- Compatibility with fluids: Mineral oils, Synthetic fluids HFB and HFC according to ISO 2943
- Degree of protection: IP65 according to EN 60529

Electrical data
- Electrical connection: AMP Superseal series 1.5
- Resistive load: 0.5 A / 48 Vdc
- Thermostat condition: Open up to 30 °C
- CE certification

BET*F30

Electrical Pressure Indicator
Deutsch DT-04-2-P

Settings	Ordering code
2.0 bar ±10%	BE T 20 H F 30 P01
2.5 bar ±10%	BE T 25 H F 30 P01

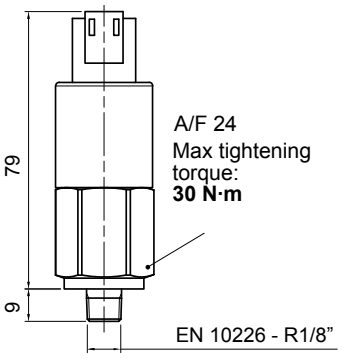

Hydraulic symbol

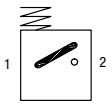

Electrical symbol

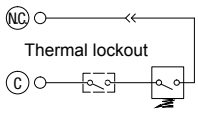

Materials
- Body: Brass
- Base: Black polyamide
- Contacts: Silver
- Seal: HNBR

Technical data
- Max working pressure: 10 bar
- Proof pressure: 15 bar
- Working temperature: From -25 °C to +100 °C
- Compatibility with fluids: Mineral oils, Synthetic fluids HFB and HFC according to ISO 2943
- Degree of protection: IP65 according to EN 60529

Electrical data
- Electrical connection: Deutsch DT-04-2-P
- Resistive load: 0.5 A / 48 Vdc
- Thermostat condition: Open up to 30 °C
- CE certification

BET*F50

Electrical Pressure Indicator
Connection EN 175301-803

Settings	Ordering code
2.0 bar ±10%	BE T 20 H F 50 P01
2.5 bar ±10%	BE T 25 H F 50 P01

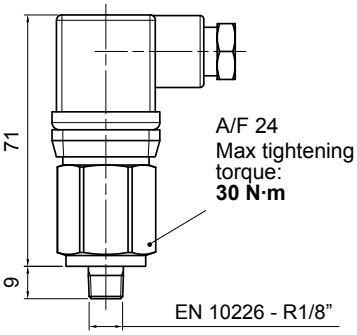

Hydraulic symbol

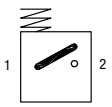

Electrical symbol

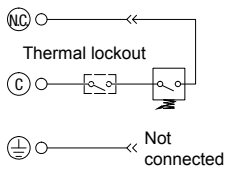

Materials
- Body: Brass
- Base: Black polyamide
- Contacts: Silver
- Seal: HNBR

Technical data
- Max working pressure: 10 bar
- Proof pressure: 15 bar
- Working temperature: From -25 °C to +100 °C
- Compatibility with fluids: Mineral oils, Synthetic fluids HFB and HFC according to ISO 2943
- Degree of protection: IP65 according to EN 60529

Electrical data
- Electrical connection: EN 175301-803
- Resistive load: 0.5 A / 48 Vdc
- Thermostat condition: Open up to 30 °C
- CE certification

Dimensions

BL*51 - BL*52 - BL*53

Electrical/Visual Pressure Indicator
Connection: EN 175301-803

51: Transparent base with lamps 24 Vdc
52: Transparent base with lamps 110 Vdc
53: Transparent base with lamps 230 Vac

Settings	Ordering code
1.5 bar ±10%	BL A 15 H A xx P01
2.0 bar ±10%	BL A 20 H A xx P01

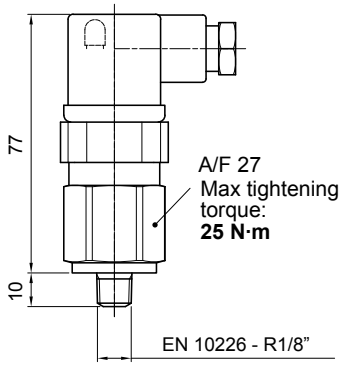

Hydraulic symbol

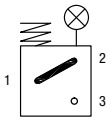

Electrical symbol

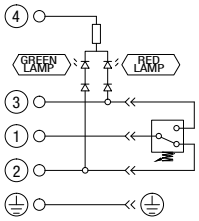

Materials
- Body: Brass
- Base: Transparent polyamide
- Contacts: Silver
- Seal: HNBR

Technical data
- Max working pressure: 40 bar
- Proof pressure: 60 bar
- Working temperature: From -25 °C to +80 °C
- Compatibility with fluids: Mineral oils, Synthetic fluids HFB and HFC according to ISO 2943
- Degree of protection: IP65 according to EN 60529

Electrical data

- Electrical connection:	EN 175301-803		
- Type	51	52	53
- Lamps	24 Vdc	110 Vdc	230 Vac
- Resistive load:	1 A / 24 Vdc	1 A / 110 Vdc	1 A / 230 Vac

BL*71

Electrical/Visual Pressure Indicator
Connection IEC 61076-2-101 D (M12), black base with lamps 24 Vdc

Settings	Ordering code
1.5 bar ±10%	BL A 15 H A 71 P01
2.0 bar ±10%	BL A 20 H A 71 P01

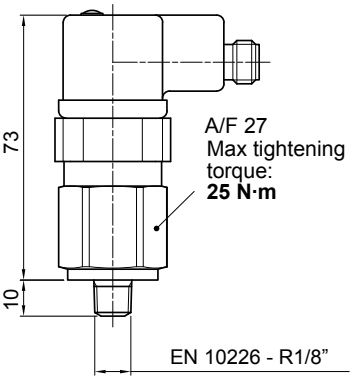

Hydraulic symbol

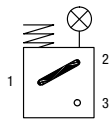

Electrical symbol

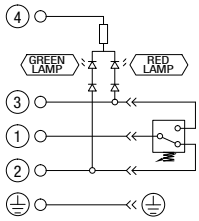

Materials
- Body: Brass
- Base: Black polyamide
- Contacts: Silver
- Seal: HNBR

Technical data
- Max working pressure: 40 bar
- Proof pressure: 60 bar
- Working temperature: From -25 °C to +80 °C
- Compatibility with fluids: Mineral oils, Synthetic fluids HFB and HFC according to ISO 2943
- Degree of protection: IP65 according to EN 60529

Electrical data
- Electrical connection: IEC 61076-2-101 D (M12)
- Lamps: 24 Vdc (black base)
- Resistive load: 0.4 A / 24 Vdc

BVA

Axial Pressure Gauge

Settings	Ordering code
1.4 bar ±10%	BV A 14 P01
2.5 bar ±10%	BV A 25 P01

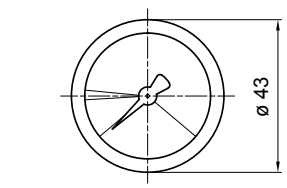

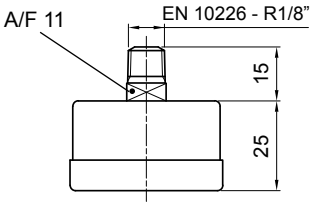

Hydraulic symbol



Dial scale

BV A 14 P01

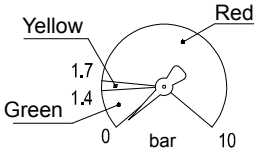

BV A 25 P01

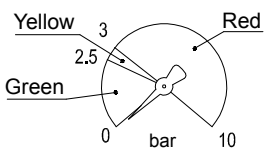

Materials
- Case: Painted Steel
- Window: Clear plastic
- Dial: Painted Steel
- Pointer: Black plastic
- Pressure connection: Brass
- Pressure element: Bourdon tube Cu-alloy sof t soldered, C type
- Movement: Cu-alloy

Technical data
- Max working pressure: Static: 7 bar
  Fluctuating: 6 bar
  Short time: 10 bar
- Working temperature: Ambient from -40 °C to +60 °C
  Fluid max +60 °C
  Storage from -40 °C to +60 °C
- Compatibility with fluids: Mineral oils, Synthetic fluids HFB and HFC according to ISO 2943
- Accuracy: Class 2.5 according to EN 13190
- Degree of protection: IP31 according to EN 60529

BVR

Radial Pressure Gauge

Settings	Ordering code
1.4 bar ±10%	BV R 14 P01
2.5 bar ±10%	BV R 25 P01

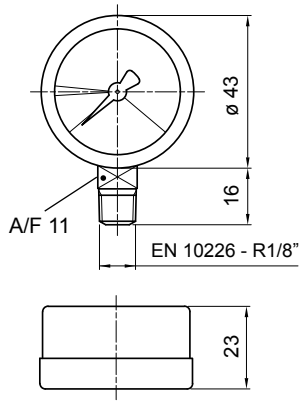

Hydraulic symbol



Dial scale

BV R 14 P01

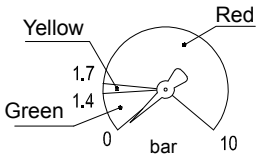

BV R 25 P01

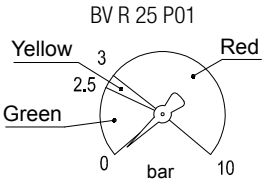

Materials

- Case:	Painted Steel
- Window:	Clear plastic
- Dial:	Painted Steel
- Pointer:	Black plastic
- Pressure connection:	Brass
- Pressure element:	Bourdon tube Cu-alloy sof t soldered, C type
- Movement:	Cu-alloy

Technical data

- Max working pressure:	Static: 7 bar Fluctuating: 6 bar Short time: 10 bar
- Working temperature:	Ambient from -40 °C to +60 °C Fluid max +60 °C Storage from -40 °C to +60 °C
- Compatibility with fluids:	Mineral oils, Synthetic fluids HFB and HFC according to ISO 2943
- Accuracy:	Class 2.5 according to EN 13190
- Degree of protection:	IP31 according to EN 60529

BVP - BVQ

Visual Pressure Indicator
BVP - Automatic reset
BVQ - Manual reset

Setting	Ordering code
1.5 bar ±10%	BV P 15 H P01
	BV Q 15 H P01
2.0 bar ±10%	BV P 20 H P01
	BV Q 20 H P01

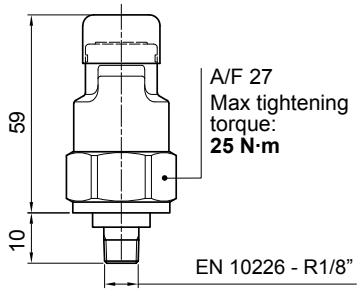

Hydraulic symbol

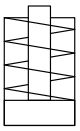

Materials

- Body:	Brass
- Cover / internal parts:	Polyamide
- Caps:	VMQ
- Seal:	HNBR

Technical data

- Reset:	BVP - Automatic reset BVQ - Manual reset
- Max working pressure:	10 bar
- Proof pressure:	15 bar
- Working temperature:	From -25 °C to +80 °C
- Compatibility with fluids:	Mineral oils, Synthetic fluids HFB and HFC according to ISO 2943
- Degree of protection:	IP45 according to EN 60529

Signals

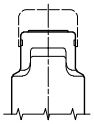

Absence of pressure
(no indicator)

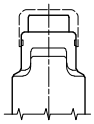

Presence of pressure
(green button rises gradually)

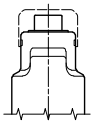

Clogged filter element
(red button risen)

Dimensions

DEA*50

Electrical Differential Pressure Indicator
Connection: EN 175301-803

Settings	Ordering code
1.2 bar ±10%	DE A 12 x A 50 P01
2.0 bar ±10%	DE A 20 x A 50 P01
5.0 bar ±10%	DE A 50 x A 50 P01
7.0 bar ±10%	DE A 70 x A 50 P01
9.5 bar ±10%	DE A 95 x A 50 P01

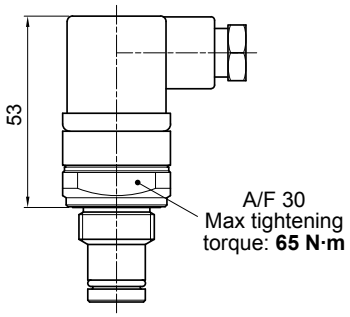

Hydraulic symbol

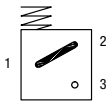

Electrical symbol

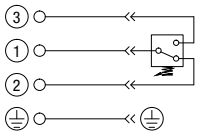

Materials
- Body: Brass
- Base: Black polyamide
- Contacts: Silver
- Seal: HNBR - FPM

Technical data
- Max working pressure: 420 bar
- Proof pressure: 630 bar
- Burst pressure: 1260 bar
- Working temperature: From -25 °C to +110 °C
- Compatibility with fluids: Mineral oils, Synthetic fluids HFB and HFC according to ISO 2943
- Degree protection: IP66 according to EN 60529 IP69K according to ISO 20653

Electrical data
- Electrical connection: EN 175301-803
- Resistive load: 0.2 A / 115 Vdc

DEH*48

Hazardous Area
Electrical Differential Pressure Indicator
Connection via three-core cable - cable fitting M20x1.5

Settings	Ordering code
2.0 bar ±10%	DE H 20 x A 48 P01
5.0 bar ±10%	DE H 50 x A 48 P01
7.0 bar ±10%	DE H 70 x A 48 P01

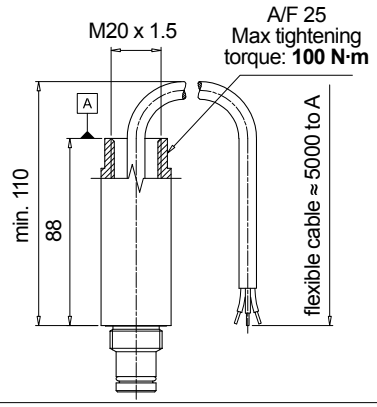

Hydraulic symbol



Electrical symbol

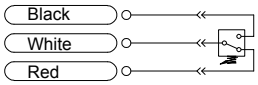

- Certification / Approvals: ATEX, IECEx, EAC TR CU
- Certification included as standard

Materials
- Body: AISI 316L
- Contacts: Rhodium
- Seal: FPM - MFQ

Technical data
- Max working pressure: 420 bar
- Proof pressure: 630 bar
- Burst pressure: 1260 bar
- Compatibility with fluids: Mineral oils, Synthetic fluids HFB and HFC according to ISO 2943
- Temperature range: T4=Tamb -60 °C to +125 °C (-76 to 257 °F) T6=Tamb -60 °C to +80 °C (-76 to 176 °F)
- Degree of protection: IP 66/67/68 according to EN 60529
- Connection type: Three-core cable, fitting M20x1.5
- Contact type: SPCO/SPDT (Hermetically sealed - Volt-free contacts)

Electrical data
- Resistive Load: 830 mA / 24 Vdc - 180 mA / 110 Vac
- Electrical Ratings: Ui = 30 Vdc / Ii = 250 mA / Pi = 1.3 W

Atex Rating
II 1 GD Ex ia IIC T6 Ga
Ex ia IIC T4 Ga
Ex ia IIIC T_{200} 85 °C Da
Ex ia IIIC T_{200} 135 °C Da

IECEx Rating
Ex ia IIC T6 Ga
Ex ia IIC T4 Ga
Ex ia IIIC T_{200} 85 °C Da
Ex ia IIIC T_{200} 135 °C Da

DEH*49

Hazardous Area
Electrical Differential Pressure Indicator
Connection via four-core cable - cable fitting 1/2" NPT

Settings	Ordering code
2.0 bar ±10%	DE H 20 x A 49 P01
5.0 bar ±10%	DE H 50 x A 49 P01
7.0 bar ±10%	DE H 70 x A 49 P01

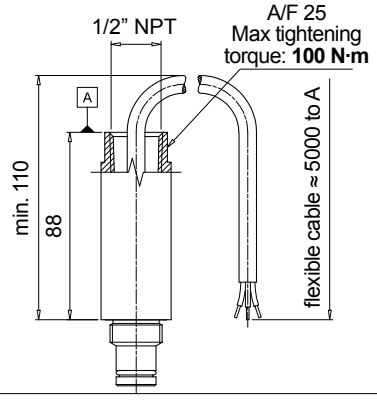

Hydraulic symbol



Electrical symbol

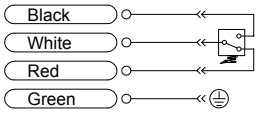

- Certification / Approvals: ATEX, IECEx, EAC TR CU, UL/CSA
- Certification included as standard

Materials
- Body: AISI 316L
- Contacts: Rhodium
- Seal: FPM - MFQ

Technical data
- Max working pressure: 420 bar
- Proof pressure: 630 bar
- Burst pressure: 1260 bar
- Compatibility with fluids: Mineral oils, Synthetic fluids HFB and HFC according to ISO 2943
- Temperature range: T4=Tamb -60 °C to +120 °C (-76 to 248 °F) T6=Tamb -60 °C to +70 °C (-76 to 158 °F) From -60 °C to +105 °C (-76 to 221 °F) : UL/CSA
- Degree of protection: IP 66/67/68 according to EN 60529
- Connection type: Four-core cable, fitting 1/2" NPT
- Contact type: SPCO/SPDT (Hermetically sealed - Volt-free contacts)

Electrical data
- Resistive Load: 830 mA / 24 Vdc - 180 mA / 110 Vac
- Electrical Ratings: Ui = 150 Vac/dc / Pi = 20 W

Atex Rating
II 2 GD Ex db IIC T6 Gb
Ex db IIC T4 Gb
Ex tb IIIC T85 °C Db
Ex tb IIIC T135 °C Db

IECEx Rating
Ex db IIC T6 Gb
Ex db IIC T4 Gb
Ex tb IIIC T85 °C Db
Ex tb IIIC T135 °C Db

UL/CSA Rating
Class I Div 1 Groups A, B, C, & D
Class II Div 1 Groups E, F, & G
Class III Hazardous Locations

DEH*70

Hazardous Area
Electrical Differential Pressure Indicator
Connection IEC 61076-2-101 D (M12)

Settings	Ordering code
2.0 bar ±10%	DE H 20 x A 70 P01
5.0 bar ±10%	DE H 50 x A 70 P01
7.0 bar ±10%	DE H 70 x A 70 P01

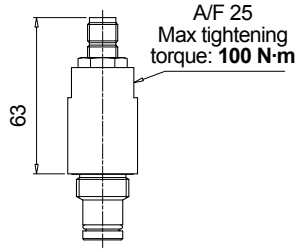

Hydraulic symbol



Electrical symbol

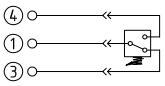

- Certification / Approvals: ATEX, IECEx, EAC TR CU
- Certification included as standard

Materials
- Body: AISI 316L with internal engineered resin switch
- Contacts: Rhodium
- Seal: FPM - MFQ

Technical data
- Max working pressure: 420 bar
- Proof pressure: 630 bar
- Burst pressure: 1260 bar
- Compatibility with fluids: Mineral oils, Synthetic fluids HFB and HFC according to ISO 2943
- Temperature range: T6=Tamb -60 °C to +80 °C (-76 to 176 °F)
- Degree of protection: IP 66/67 according to EN 60529
- Connection type: IEC 61076-2-101 D (M12)
- Contact type: SPCO/SPDT (Hermetically sealed - Volt-free contacts)

Electrical data
- Resistive Load: 830 mA / 24 Vdc - 180 mA / 110 Vdc
- Electrical Ratings: Ui = 30 Vdc / Ii = 250 mA / Pi = 1.3 W

Atex Rating
II 1 GD Ex ia IIC T6 Ga
Ex ia IIIC T_{200} 135 °C Da

IECEx Rating
Ex ia IIC T6 Ga
Ex ia IIIC T_{200} 135 °C Da

DEM*F10

Electrical Differential Pressure Indicator
Connection: AMP Superseal series 1.5

Settings	Ordering code
1.2 bar ±10%	DE M 12 x F 10 P01
2.0 bar ±10%	DE M 20 x F 10 P01
5.0 bar ±10%	DE M 50 x F 10 P01
7.0 bar ±10%	DE M 70 x F 10 P01
9.5 bar ±10%	DE M 95 x F 10 P01

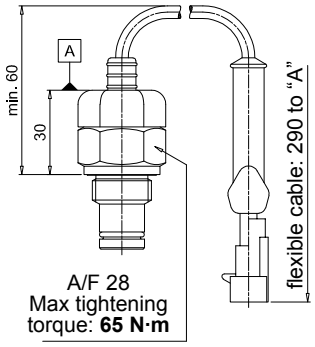

Hydraulic symbol

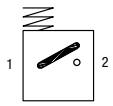

Electrical symbol

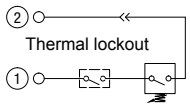

Materials
- Body: Brass
- Base: Black polyamide
- Contacts: Silver
- Seal: HNBR - FPM

Technical data
- Max working pressure: 420 bar
- Proof pressure: 630 bar
- Burst pressure: 1260 bar
- Working temperature: From -25 °C to +110 °C
- Compatibility with fluids: Mineral oils, Synthetic fluids HFB and HFC according to ISO 2943
- Degree protection: IP66 according to EN 60529

Electrical data
- Electrical connection: AMP Superseal series 1.5
- Resistive load: 0.2 A / 115 Vdc
- Switching type: Normally open contacts (NC on request)
- Thermal lockout: Normally open up to 30 °C (option "F")

DEM*F20

Electrical Differential Pressure Indicator
AMP Time junior

Settings	Ordering code
1.2 bar ±10%	DE M 12 x F 20 P01
2.0 bar ±10%	DE M 20 x F 20 P01
5.0 bar ±10%	DE M 50 x F 20 P01
7.0 bar ±10%	DE M 70 x F 20 P01
9.5 bar ±10%	DE M 95 x F 20 P01

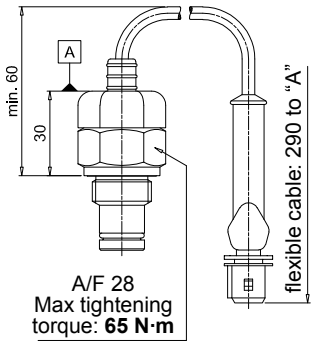

Hydraulic symbol

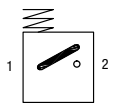

Electrical symbol

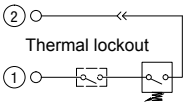

Materials
- Body: Brass
- Base: Black polyamide
- Contacts: Silver
- Seal: HNBR - FPM

Technical data
- Max working pressure: 420 bar
- Proof pressure: 630 bar
- Burst pressure: 1260 bar
- Working temperature: From -25 °C to +110 °C
- Compatibility with fluids: Mineral oils, Synthetic fluids HFB and HFC according to ISO 2943
- Degree protection: IP66 according to EN 60529

Electrical data
- Electrical connection: AMP Time junior
- Resistive load: 0.2 A / 115 Vdc
- Switching type: Normally open contacts (NC on request)
- Thermal lockout: Normally open up to 30 °C (option "F")

Dimensions

DEM*F30

Electrical Differential Pressure Indicator
Deutsch DT-04-2-P

Settings	Ordering code
1.2 bar ±10%	DE M 12 x F 30 P01
2.0 bar ±10%	DE M 20 x F 30 P01
5.0 bar ±10%	DE M 50 x F 30 P01
7.0 bar ±10%	DE M 70 x F 30 P01
9.5 bar ±10%	DE M 95 x F 30 P01

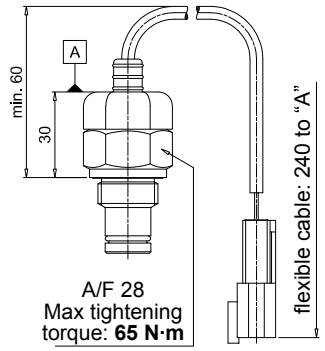

Hydraulic symbol

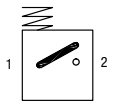

Electrical symbol

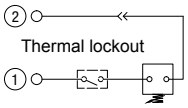

Materials
- Body: Brass
- Base: Black polyamide
- Contacts: Silver
- Seal: HNBR - FPM

Technical data
- Max working pressure: 420 bar
- Proof pressure: 630 bar
- Burst pressure: 1260 bar
- Working temperature: From -25 °C to +110 °C
- Compatibility with fluids: Mineral oils, Synthetic fluids HFB and HFC according to ISO 2943
- Degree protection: IP66 according to EN 60529

Electrical data
- Electrical connection: Deutsch DT-04-2-P
- Resistive load: 0.2 A / 115 Vdc
- Switching type: Normally open contacts (NC on request)
- Thermal lockout: Normally open up to 30 °C (option "F")

DEM*F35

Electrical Differential Pressure Indicator
Deutsch DT-04-3-P

Settings	Ordering code
1.2 bar ±10%	DE M 12 x F 35 P01
2.0 bar ±10%	DE M 20 x F 35 P01
5.0 bar ±10%	DE M 50 x F 35 P01
7.0 bar ±10%	DE M 70 x F 35 P01
9.5 bar ±10%	DE M 95 x F 35 P01

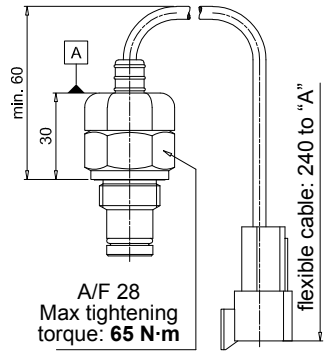

Hydraulic symbol

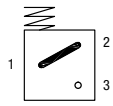

Electrical symbol

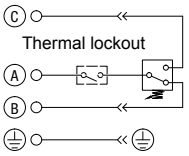

Materials
- Body: Brass
- Base: Black polyamide
- Contacts: Silver
- Seal: HNBR - FPM

Technical data
- Max working pressure: 420 bar
- Proof pressure: 630 bar
- Burst pressure: 1260 bar
- Working temperature: From -25 °C to +110 °C
- Compatibility with fluids: Mineral oils, Synthetic fluids HFB and HFC according to ISO 2943
- Degree protection: IP66 according to EN 60529

Electrical data
- Electrical connection: Deutsch DT-04-3-P
- Resistive load: 0.2 A / 115 Vdc
- Switching type: SPDT contact
- Thermal lockout: Normally open up to 30 °C (option "F")

DEM*A10

Electrical Differential Pressure Indicator
Connection: AMP Superseal series 1.5

Settings	Ordering code
1.2 bar ±10%	DE M 12 x A 10 P01
2.0 bar ±10%	DE M 20 x A 10 P01
5.0 bar ±10%	DE M 50 x A 10 P01
7.0 bar ±10%	DE M 70 x A 10 P01
9.5 bar ±10%	DE M 95 x A 10 P01

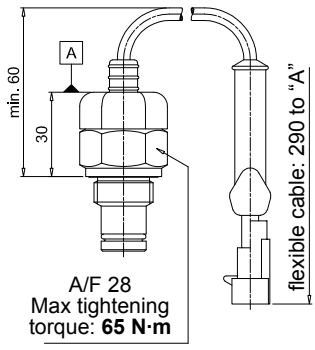

Hydraulic symbol

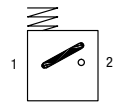

Electrical symbol

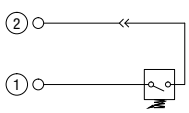

Materials
- Body: Brass
- Base: Black polyamide
- Contacts: Silver
- Seal: HNBR - FPM

Technical data
- Max working pressure: 420 bar
- Proof pressure: 630 bar
- Burst pressure: 1260 bar
- Working temperature: From -25 °C to +110 °C
- Compatibility with fluids: Mineral oils, Synthetic fluids HFB and HFC according to ISO 2943
- Degree protection: IP66 according to EN 60529

Electrical data
- Electrical connection: AMP Superseal series 1.5
- Resistive load: 0.2 A / 115 Vdc
- Switching type: Normally open contacts (NC on request)

DEM*A20

Electrical Differential Pressure Indicator
AMP Time junior

Settings	Ordering code
1.2 bar ±10%	DE M 12 x A 20 P01
2.0 bar ±10%	DE M 20 x A 20 P01
5.0 bar ±10%	DE M 50 x A 20 P01
7.0 bar ±10%	DE M 70 x A 20 P01
9.5 bar ±10%	DE M 95 x A 20 P01

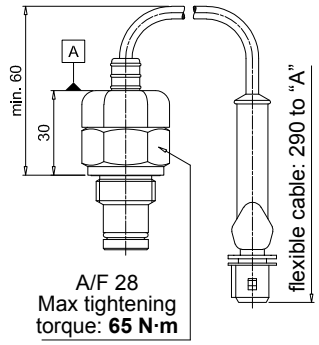

Hydraulic symbol

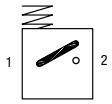

Electrical symbol

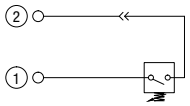

Materials
- Body: Brass
- Base: Black polyamide
- Contacts: Silver
- Seal: HNBR - FPM

Technical data
- Max working pressure: 420 bar
- Proof pressure: 630 bar
- Burst pressure: 1260 bar
- Working temperature: From -25 °C to +110 °C
- Compatibility with fluids: Mineral oils, Synthetic fluids HFB and HFC according to ISO 2943
- Degree protection: IP66 according to EN 60529

Electrical data
- Electrical connection: AMP Time junior
- Resistive load: 0.2 A / 115 Vdc
- Switching type: Normally open contacts (NC on request)

DEM*A30

Electrical Differential Pressure Indicator
Deutsch DT-04-2-P

Settings	Ordering code
1.2 bar ±10%	DE M 12 x A 30 P01
2.0 bar ±10%	DE M 20 x A 30 P01
5.0 bar ±10%	DE M 50 x A 30 P01
7.0 bar ±10%	DE M 70 x A 30 P01
9.5 bar ±10%	DE M 95 x A 30 P01

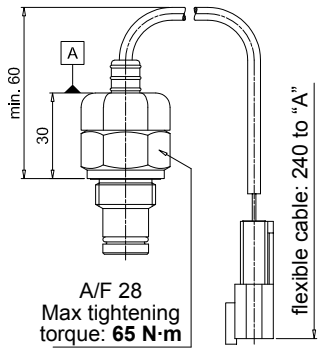

Hydraulic symbol

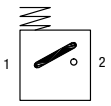

Electrical symbol

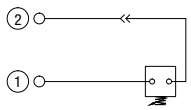

Materials
- Body: Brass
- Base: Black polyamide
- Contacts: Silver
- Seal: HNBR - FPM

Technical data
- Max working pressure: 420 bar
- Proof pressure: 630 bar
- Burst pressure: 1260 bar
- Working temperature: From -25 °C to +110 °C
- Compatibility with fluids: Mineral oils, Synthetic fluids HFB and HFC according to ISO 2943
- Degree protection: IP66 according to EN 60529

Electrical data
- Electrical connection: Deutsch DT-04-2-P
- Resistive load: 0.2 A / 115 Vdc
- Switching type: Normally open contacts (NC on request)

DEM*A35

Electrical Differential Pressure Indicator
Deutsch DT-04-3-P

Settings	Ordering code
1.2 bar ±10%	DE M 12 x A 35 P01
2.0 bar ±10%	DE M 20 x A 35 P01
5.0 bar ±10%	DE M 50 x A 35 P01
7.0 bar ±10%	DE M 70 x A 35 P01
9.5 bar ±10%	DE M 95 x A 35 P01

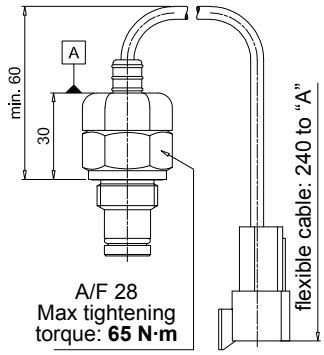

Hydraulic symbol

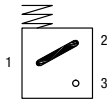

Electrical symbol

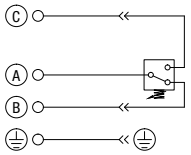

Materials
- Body: Brass
- Base: Black polyamide
- Contacts: Silver
- Seal: HNBR - FPM

Technical data
- Max working pressure: 420 bar
- Proof pressure: 630 bar
- Burst pressure: 1260 bar
- Working temperature: From -25 °C to +110 °C
- Compatibility with fluids: Mineral oils, Synthetic fluids HFB and HFC according to ISO 2943
- Degree protection: IP66 according to EN 60529

Electrical data
- Electrical connection: Deutsch DT-04-3-P
- Resistive load: 0.2 A / 115 Vdc
- Switching type: SPDT contact

Dimensions

DES*10

Electrical Differential Pressure Indicator
AMP Superseal series 1.5

Settings	Ordering code
1.2 bar ±10%	DE S 12 H A 10 P01
2.5 bar ±10%	DE S 25 H A 10 P01
4.0 bar ±10%	DE S 40 H A 10 P01

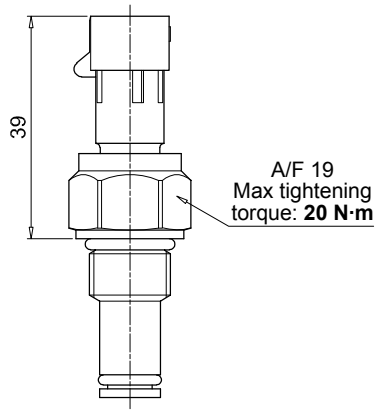

Hydraulic symbol

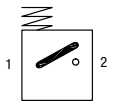

Electrical symbol

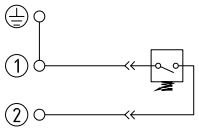

Materials
- Body: Brass
- Internal parts: Brass - Polyamide
- Contacts: Silver
- Seal: HNBR

Technical data
- Max working pressure: 16 bar
- Proof pressure: 24 bar
- Burst pressure: 48 bar
- Working temperature: From -25 °C to +110 °C
- Compatibility with fluids: Mineral oils, Synthetic fluids HFB and HFC according to ISO 2943
- Degree protection: IP67 according to EN 60529

Electrical data
- Electrical connection: AMP Superseal series 1.5
- Resistive load: 0.2 A / 24 Vdc
- Switching type: Normally open contacts (NC on request)

DES*30

Electrical Differential Pressure Indicator
Deutsch DT-04-2-P

Settings	Ordering code
1.2 bar ±10%	DE S 12 H A 30 P01
2.5 bar ±10%	DE S 25 H A 30 P01
4.0 bar ±10%	DE S 40 H A 30 P01

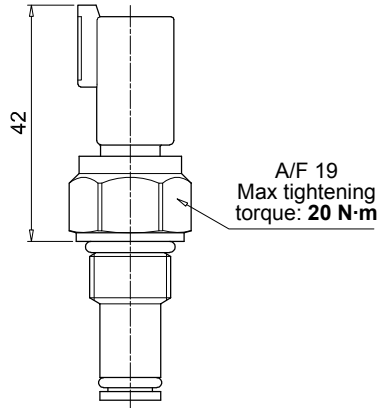

Hydraulic symbol

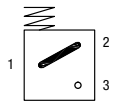

Electrical symbol

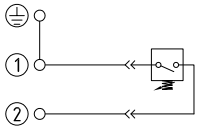

Materials
- Body: Brass
- Internal parts: Brass - Polyamide
- Contacts: Silver
- Seal: HNBR

Technical data
- Max working pressure: 16 bar
- Proof pressure: 24 bar
- Burst pressure: 48 bar
- Working temperature: From -25 °C to +110 °C
- Compatibility with fluids: Mineral oils, Synthetic fluids HFB and HFC according to ISO 2943
- Degree protection: IP67 according to EN 60529

Electrical data
- Electrical connection: Deutsch DT-04-2-P
- Resistive load: 0.2 A / 24 Vdc
- Switching type: Normally open contacts (NC on request)

DES*50

Electrical Differential Pressure Indicator
Connection: EN 175301-803

Settings	Ordering code
1.2 bar ±10%	DE S 12 H A 50 P01
2.5 bar ±10%	DE S 25 H A 50 P01
4.0 bar ±10%	DE S 40 H A 50 P01

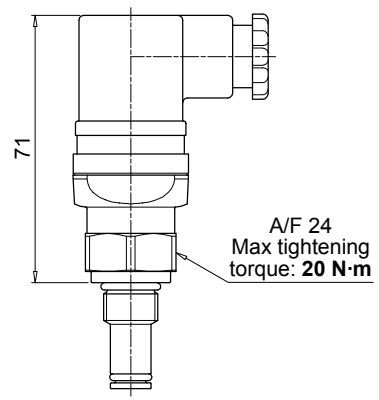

Hydraulic symbol

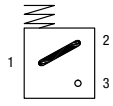

Electrical symbol

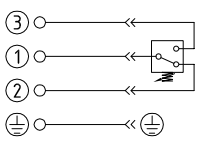

Materials
- Body: Aluminium
- Internal parts: Aluminium - Polyamide
- Contacts: Silver
- Seal: HNBR

Technical data
- Max working pressure: 35 bar
- Proof pressure: 53 bar
- Burst pressure: 105 bar
- Working temperature: From -25 °C to +110 °C
- Compatibility with fluids: Mineral oils, Synthetic fluids HFB and HFC according to ISO 2943
- Degree protection: IP66 according to EN 60529 IP69K according to EN 20653

Electrical data
- Electrical connection: EN 175301-803
- Resistive load: 0.2 A / 115 Vdc

DES*80

Electrical Differential Pressure Indicator
Stud #10-32 UNF

Settings	Ordering code
1.2 bar ±10%	DE S 12 H A 80 P01
2.5 bar ±10%	DE S 25 H A 80 P01
4.0 bar ±10%	DE S 40 H A 80 P01

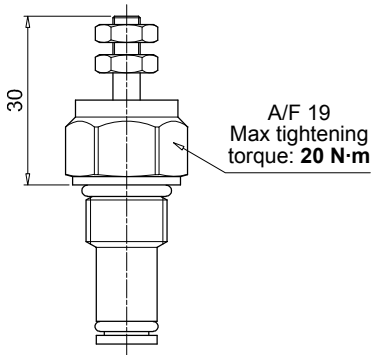

Hydraulic symbol

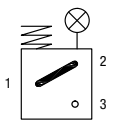

Electrical symbol

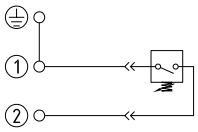

Materials
- Body: Brass
- Internal parts: Brass - Polyamide
- Contacts: Silver
- Seal: HNBR

Technical data
- Max working pressure: 16 bar
- Proof pressure: 24 bar
- Burst pressure: 48 bar
- Working temperature: From -25 °C to +110 °C
- Compatibility with fluids: Mineral oils, Synthetic fluids HFB and HFC according to ISO 2943
- Degree protection: IP67 according to EN 60529

Electrical data
- Electrical connection: Stud #10-32 UNF
- Resistive load: 0.2 A / 24 Vdc
- Switching type: Normally open contacts (NC on request)

DEU*50 UL

Electrical Differential Pressure Indicator
Connection EN 175301-803

Settings	Ordering code
2.0 bar ±10%	DE U 20 V A 50 P01 UL
5.0 bar ±10%	DE U 50 V A 50 P01 UL
7.0 bar ±10%	DE U 70 V A 50 P01 UL

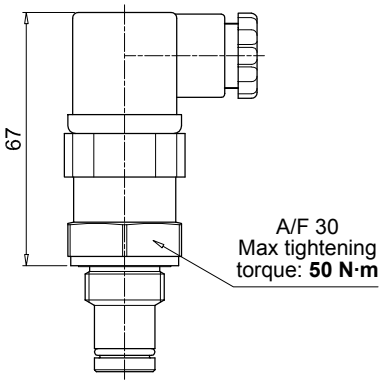

Hydraulic symbol

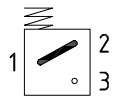

Electrical symbol

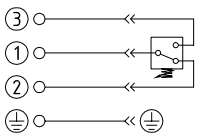

- Certification: UL
- Certification included as standard

Materials
- Body: Brass
- Base: Black Polyamide
- Contacts: Silver
- Seal: FPM

Technical data
- Max working pressure: 210 bar
- Proof pressure: 220 bar
- Burst pressure: 880 bar
- Working temperature: From --25 °C to +85 °C
- Compatibility with fluids: Mineral oils, Synthetic fluids HFB and HFC according to ISO 2943
- Degree protection: IP65 according to EN 60529

Electrical data
- Electrical connection: EN 175301-803
- Resistive load: 3 A / 30 Vdc
  3 A / 125 Vac
  3 (3) A / 250 Vac

DEX*50

Electrical Differential Pressure Indicator
Connection: EN 175301-803

Settings	Ordering code
1.2 bar ±10%	DE X 12 x A 50 P01
2.0 bar ±10%	DE X 20 x A 50 P01
5.0 bar ±10%	DE X 50 x A 50 P01
7.0 bar ±10%	DE X 70 x A 50 P01
9.5 bar ±10%	DE X 95 x A 50 P01

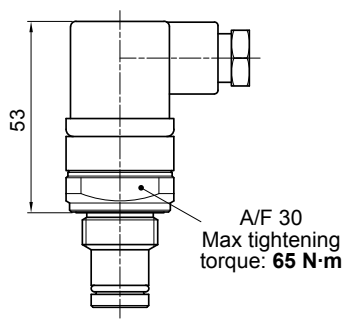

Hydraulic symbol

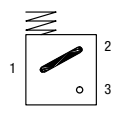

Electrical symbol

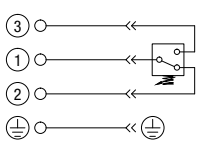

Materials
- Body: AISI 316L
- Base: Black polyamide
- Contacts: Silver
- Seal: HNBR - MFQ

Technical data
- Max working pressure: 420 bar
- Proof pressure: 630 bar
- Burst pressure: 1260 bar
- Working temperature: From -25 °C to +110 °C
- Compatibility with fluids: Mineral oils, Synthetic fluids HFB and HFC according to ISO 2943
- Degree protection: IP66 according to EN 60529
  IP69K according to ISO 20653

Electrical data
- Electrical connection: EN 175301-803
- Resistive load: 0.2 A / 115 Vdc

Dimensions

DEZ*50

Electrical Differential Pressure Indicator
Connection: EN 175301-803

Settings	Ordering code
5.0 bar ±10%	DE Z 50 x A 50 P01
7.0 bar ±10%	DE Z 70 x A 50 P01
9.5 bar ±10%	DE Z 95 x A 50 P01

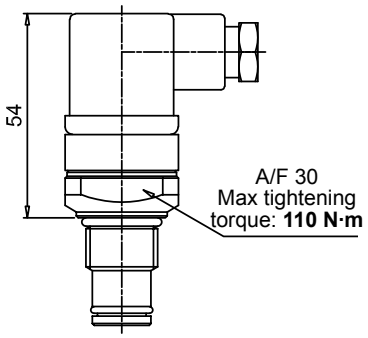

Hydraulic symbol

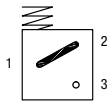

Electrical symbol

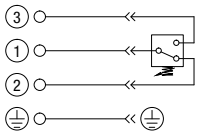

Materials
- Body: AISI 316L
- Base: Black polyamide
- Contacts: Silver
- Seal: HNBR - MFQ

Technical data
- Max working pressure: 700 bar
- Proof pressure: 1050 bar
- Burst pressure: 2100 bar
- Working temperature: From -25 °C to +110 °C
- Compatibility with fluids: Mineral oils, Synthetic fluids HFA, HFB, HFC according to ISO 2943
- Degree protection: IP66 according to EN 60529 IP69K according to ISO 20653

Electrical data
- Electrical connection: EN 175301-803
- Resistive load: 0.2 A / 115 Vdc

DLA*51 - DLA*52

Electrical/Visual Differential Pressure Indicator
Connection: EN 175301-803
51: Transparent base with lamps 24 Vdc
52: Transparent base with lamps 110 Vdc

Settings	Ordering code
1.2 bar ±10%	DL A 12 x A xx P01
2.0 bar ±10%	DL A 20 x A xx P01
5.0 bar ±10%	DL A 50 x A xx P01
7.0 bar ±10%	DL A 70 x A xx P01
9.5 bar ±10%	DL A 95 x A xx P01

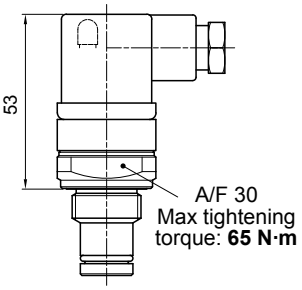

Hydraulic symbol

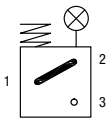

Electrical symbol

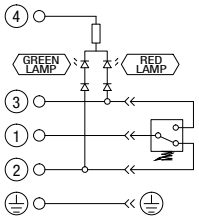

Materials
- Body: Brass
- Base: Transparent polyamide
- Contacts: Silver
- Seal: HNBR - FPM

Technical data
- Max working pressure: 420 bar
- Proof pressure: 630 bar
- Burst pressure: 1260 bar
- Working temperature: From -25 °C to +110 °C
- Compatibility with fluids: Mineral oils, Synthetic fluids HFB and HFC according to ISO 2943
- Degree protection: IP66 according to EN 60529 IP69K according to ISO 20653

Electrical data

- Electrical connection:	EN 175301-803	
- Type	51	52
- Lamps	24 Vdc	110 Vdc
- Resistive load:	1 A / 24 Vdc	1 A / 110 Vdc

DLA*71

Electrical/Visual Differential pressure indicator
Connection IEC 61076-2-101 D (M12),
black base with lamps 24 Vdc

Settings	Ordering code
1.2 bar ±10%	DL A 12 x A 71 P01
2.0 bar ±10%	DL A 20 x A 71 P01
5.0 bar ±10%	DL A 50 x A 71 P01
7.0 bar ±10%	DL A 70 x A 71 P01
9.5 bar ±10%	DL A 95 x A 71 P01

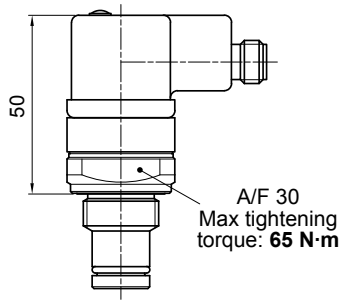

Hydraulic symbol

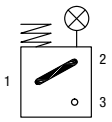

Electrical symbol

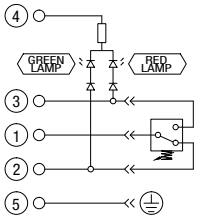

Materials
- Body: Brass
- Base: Black polyamide
- Contacts: Silver
- Seal: HNBR - FPM

Technical data
- Max working pressure: 420 bar
- Proof pressure: 630 bar
- Burst pressure: 1260 bar
- Working temperature: From -25 °C to +110 °C
- Compatibility with fluids: Mineral oils, Synthetic fluids HFB and HFC according to ISO 2943
- Degree protection: IP65 according to EN 60529 IP69K according to ISO 20653

Electrical data
- Electrical connection: IEC 61076-2-101 D (M12)
- Lamps 24 Vdc (black base)
- Resistive load: 0.4 A / 24 Vdc

DLE*A50

Electrical/Visual Differential Pressure Indicator
Without term. Connections: EN 175301-803

Settings	Ordering code
1.2 bar ±10%	DL E 12 x A 50 P01
2.0 bar ±10%	DL E 20 x A 50 P01
5.0 bar ±10%	DL E 50 x A 50 P01
7.0 bar ±10%	DL E 70 x A 50 P01
9.5 bar ±10%	DL E 95 x A 50 P01

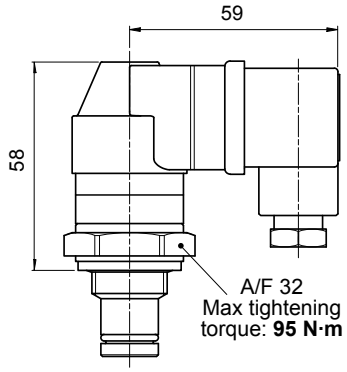

Hydraulic symbol

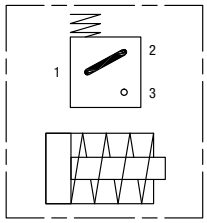

Electrical symbol

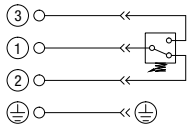

Materials
- Body: Brass
- Base: Black polyamide
- Contacts: Silver
- Seal: HNBR - FPM

Technical data
- Max working pressure: 420 bar
- Proof pressure: 630 bar
- Burst pressure: 1260 bar
- Working temperature: From -25 °C to +110 °C
- Compatibility with fluids: Mineral oils, Synthetic fluids HFB and HFC according to ISO 2943
- Degree protection: IP65 according to EN 60529

Electrical data
- Electrical connections: EN 175301-803
- Resistive load: 5 A / 250 Vac
- Available the connector with lamps

DLE*F50

Electrical/Visual Differential Pressure Indicator
With term. Connections: EN 175301-803

Settings	Ordering code
1.2 bar ±10%	DL E 12 x F 50 P01
2.0 bar ±10%	DL E 20 x F 50 P01
5.0 bar ±10%	DL E 50 x F 50 P01
7.0 bar ±10%	DL E 70 x F 50 P01
9.5 bar ±10%	DL E 95 x F 50 P01

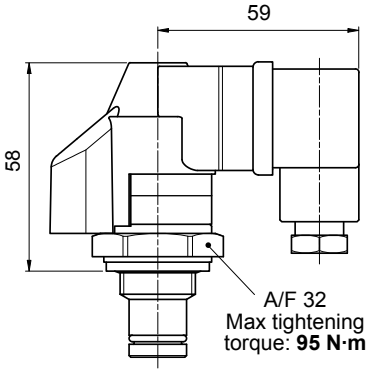

Hydraulic symbol

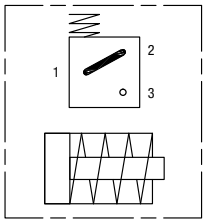

Electrical symbol

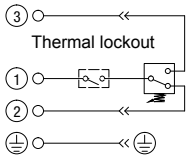

Materials
- Body: Brass
- Base: Black polyamide
- Contacts: Silver
- Seal: HNBR - FPM

Technical data
- Max working pressure: 420 bar
- Proof pressure: 630 bar
- Burst pressure: 1260 bar
- Working temperature: From -25 °C to +110 °C
- Compatibility with fluids: Mineral oils, Synthetic fluids HFB and HFC according to ISO 2943
- Degree protection: IP65 according to EN 60529

Electrical data
- Electrical connections: EN 175301-803
- Resistive load: 5 A / 250 Vac
- Thermal lockout setting: +30 °C

DLX*51 - DLX*52

Electrical/Visual Differential Pressure Indicator
Connection: EN 175301-803

51: Transparent base with lamps 24 Vdc
52: Transparent base with lamps 110 Vdc

Settings	Ordering code
1.2 bar ±10%	DL X 12 x A 5x P01
2.0 bar ±10%	DL X 20 x A 5x P01
5.0 bar ±10%	DL X 50 x A 5x P01
7.0 bar ±10%	DL X 70 x A 5x P01
9.5 bar ±10%	DL X 95 x A 5x P01

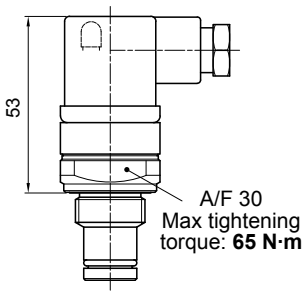

Hydraulic symbol

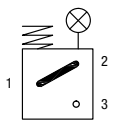

Electrical symbol

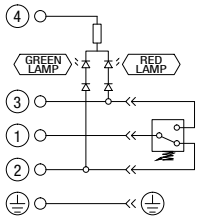

Materials
- Body: AISI 316L
- Base: Transparent polyamide
- Contacts: Silver
- Seal: HNBR - MFQ

Technical data
- Max working pressure: 420 bar
- Proof pressure: 630 bar
- Burst pressure: 1260 bar
- Working temperature: From -25 °C to +110 °C
- Compatibility with fluids: Mineral oils, Synthetic fluids HFB and HFC according to ISO 2943
- Degree protection: IP66 according to EN 60529 IP69K according to ISO 20653

Electrical data

- Electrical connection:	EN 175301-803	
- Type	51	52
- Lamps	24 Vdc	110 Vdc
- Resistive load:	1 A / 24 Vdc	1 A / 110 Vdc

Dimensions

DLZ*51 - DLZ*52

Electrical/Visual Differential Pressure Indicator
Connection: EN 175301-803

51: Transparent base with lamps 24 Vdc
52: Transparent base with lamps 110 Vdc

Settings	Ordering code
1.2 bar ±10%	DL Z 12 x A 5x P01
2.5 bar ±10%	DL Z 25 x A 5x P01
5.0 bar ±10%	DL Z 50 x A 5x P01
7.0 bar ±10%	DL Z 70 x A 5x P01
9.5 bar ±10%	DL Z 95 x A 5x P01

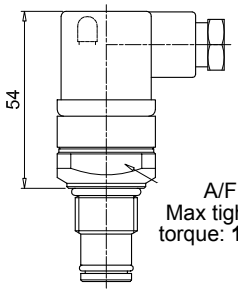

Hydraulic symbol

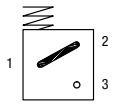

Electrical symbol

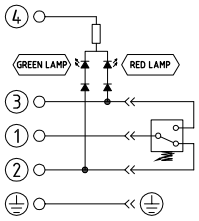

Materials
- Body: AISI 316L
- Base: Transparent polyamide
- Contacts: Silver
- Seal: HNBR - MFQ

Technical data
- Max working pressure: 700 bar
- Proof pressure: 1050 bar
- Burst pressure: 2100 bar
- Working temperature: From -25 °C to +110 °C
- Compatibility with fluids: Mineral oils, Synthetic fluids HFB and HFC according to ISO 2943
- Degree protection: IP66 according to EN 60529 IP69K according to ISO 20653

Electrical data

- Electrical connection:	EN 175301-803	
- Type	51	52
- Lamps	24 Vdc	110 Vdc
- Resistive load:	1 A / 24 Vdc	1 A / 110 Vdc

DTA*F70

Electronic Differential Pressure Indicator
Connection: IEC 61076-2-101 D (M12)

Settings	Ordering code
1.2 bar ±10%	DT A 12 x F 70 P01
2.0 bar ±10%	DT A 20 x F 70 P01
5.0 bar ±10%	DT A 50 x F 70 P01
7.0 bar ±10%	DT A 70 x F 70 P01
9.5 bar ±10%	DT A 95 x F 70 P01

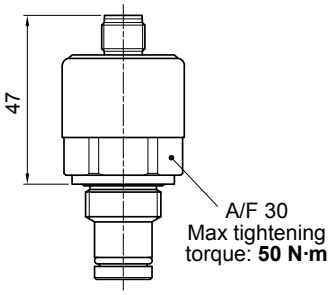

Hydraulic symbol

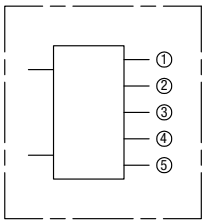

Electrical symbol

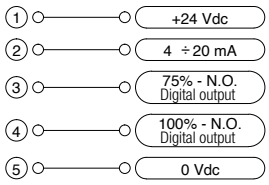

Materials
- Body: Brass
- Internal parts: Brass - Polyamide
- Contacts: Silver
- Seal: HNBR - FPM

Technical data
- Max working pressure: 420 bar
- Proof pressure: 630 bar
- Burst pressure: 1260 bar
- Compatibility with fluids: Mineral oils, Synthetic fluids HFB and HFC according to ISO 2943
- Degree protection: IP67 according to EN 60529

Electrical data
- Electrical connection: IEC 61076-2-101 D (M12)
- Power supply: 24 Vdc
- Analogue output: From 4 to 20 mA
- Thermal lockout: 30 °C (all output signals stalled up to 30 °C)

DTI*70

IO-Link Electronic Differential Pressure Indicator
Connection: IEC 61076-2-101 D (M12)

Settings	Ordering code
1.2 bar ±10%	DT I 12 x A 70 P01
2.0 bar ±10%	DT I 20 x A 70 P01
5.0 bar ±10%	DT I 50 x A 70 P01
7.0 bar ±10%	DT I 70 x A 70 P01
9.5 bar ±10%	DT I 95 x A 70 P01

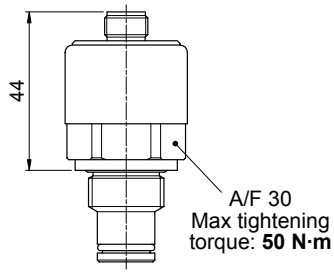

Hydraulic symbol

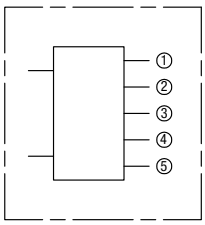

Electrical symbol

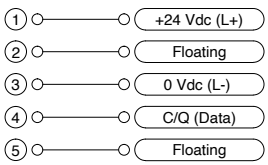

Materials
- Body: Brass
- Internal parts: Brass - Polyamide
- Contacts: Silver
- Seal: HNBR - FPM

Technical data
- Max working pressure: 420 bar
- Proof pressure: 630 bar
- Burst pressure: 1260 bar
- Compatibility with fluids: Mineral oils, Synthetic fluids HFB and HFC according to ISO 2943
- Degree protection: IP67 according to EN 60529

Electrical data
- Electrical connection: IEC 61076-2-101 D (M12)
- Power supply: 24 Vdc

IO-Link data
- Differential pressure [bar]: Float 32/4 byte
- Temperature [°C]: Float 32/4 byte
- State register: Unit 16/2 byte
- Errors register: Unit 16/2 byte

DVA

Visual Differential Pressure Indicator

Settings	Ordering code
1.2 bar ±10%	DV A 12 x P01
2.0 bar ±10%	DV A 20 x P01
5.0 bar ±10%	DV A 50 x P01
7.0 bar ±10%	DV A 70 x P01
9.5 bar ±10%	DV A 95 x P01

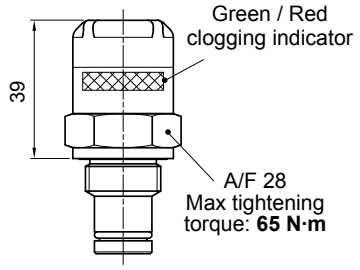

Hydraulic symbol

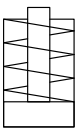

Materials
- Body: Brass
- Internal parts: Brass - Polyamide
- Seal: HNBR - FPM

Technical data
- Reset: Automatic reset
- Max working pressure: 420 bar
- Proof pressure: 630 bar
- Burst pressure: 1260 bar
- Working temperature: From -25 °C to +110 °C
- Compatibility with fluids: Mineral oils, Synthetic fluids HFB and HFC according to ISO 2943
- Degree protection: IP65 according to EN 60529

DVM

Visual Differential Pressure Indicator

Settings	Ordering code
1.2 bar ±10%	DV M 12 x P01
2.0 bar ±10%	DV M 20 x P01
5.0 bar ±10%	DV M 50 x P01
7.0 bar ±10%	DV M 70 x P01
9.5 bar ±10%	DV M 95 x P01

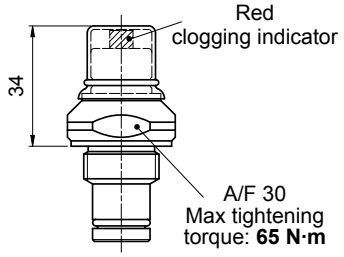

Hydraulic symbol

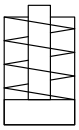

Materials
- Body: Brass
- Internal parts: Brass - Polyamide
- Seal: HNBR - FPM

Technical data
- Reset: Manual reset
- Max working pressure: 420 bar
- Proof pressure: 630 bar
- Burst pressure: 1260 bar
- Working temperature: From -25 °C to +110 °C
- Compatibility with fluids: Mineral oils, Synthetic fluids HFB and HFC according to ISO 2943
- Degree protection: IP65 according to EN 60529

DVS

Visual Differential Pressure Indicator
Connection: EN 175301-803

Settings	Ordering code
1.2 bar ±10%	DV S 12 H P01
2.5 bar ±10%	DV S 25 H P01
4.0 bar ±10%	DV S 40 H P01

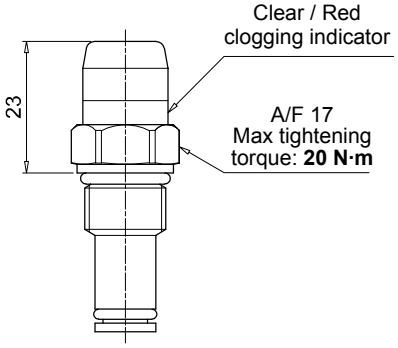

Hydraulic symbol

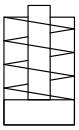

Materials
- Body: Brass
- Internal parts: Brass - Polyamide
- Seal: HNBR

Technical data
- Reset: Automatic reset
- Max working pressure: 35 bar
- Proof pressure: 53 bar
- Burst pressure: 105 bar
- Working temperature: From -25 °C to +110 °C
- Compatibility with fluids: Mineral oils, Synthetic fluids HFB and HFC according to ISO 2943
- Degree protection: IP67 according to EN 60529

Dimensions

DVX

Visual Differential Pressure Indicator

Settings	Ordering code
1.2 bar ±10%	DV X 12 x P01
2.0 bar ±10%	DV X 20 x P01
5.0 bar ±10%	DV X 50 x P01
7.0 bar ±10%	DV X 70 x P01
9.5 bar ±10%	DV X 95 x P01

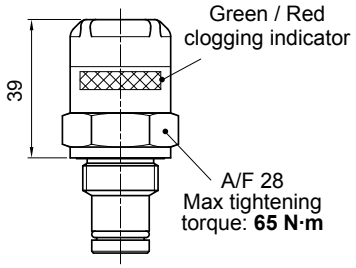

Hydraulic symbol

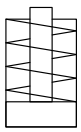

Materials
- Body: AISI 316L
- Internal parts: AISI 316L - Polyamide
- Seal: HNBR - MFQ

Technical data
- Reset: Automatic reset
- Max working pressure: 420 bar
- Proof pressure: 630 bar
- Burst pressure: 1260 bar
- Working temperature: From -25 °C to +110 °C
- Compatibility with fluids: Mineral oils, Synthetic fluids HFB and HFC according to ISO 2943
- Degree protection: IP65 according to EN 60529

DVY

Visual Differential Pressure Indicator

Settings	Ordering code
1.2 bar ±10%	DV Y 12 x P01
2.0 bar ±10%	DV Y 20 x P01
5.0 bar ±10%	DV Y 50 x P01
7.0 bar ±10%	DV Y 70 x P01
9.5 bar ±10%	DV Y 95 x P01

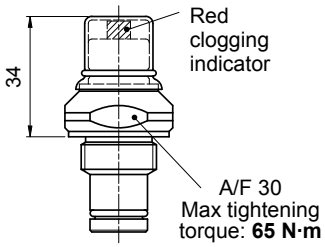

Hydraulic symbol

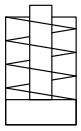

Materials
- Body: AISI 316L
- Internal parts: AISI 316L - Polyamide
- Seal: HNBR - MFQ

Technical data
- Reset: Manual reset
- Max working pressure: 420 bar
- Proof pressure: 630 bar
- Burst pressure: 1260 bar
- Working temperature: From -25 °C to +110 °C
- Compatibility with fluids: Mineral oils, Synthetic fluids HFB and HFC according to ISO 2943
- Degree protection: IP65 according to EN 60529

DVZ

Visual Differential Pressure Indicator

Settings	Ordering code
1.2 bar ±10%	DV Z 12 x P01
2.5 bar ±10%	DV Z 25 x P01
5.0 bar ±10%	DV Z 50 x P01
7.0 bar ±10%	DV Z 70 x P01
9.5 bar ±10%	DV Z 95 x P01

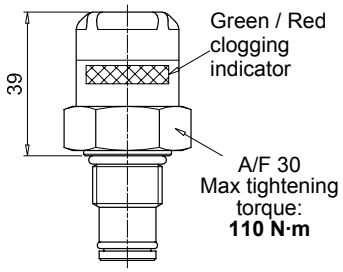

Hydraulic symbol

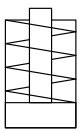

Materials
- Body: AISI 316L
- Internal parts: AISI 316L - Polyamide
- Seal: HNBR - MFQ

Technical data
- Reset: Automatic reset
- Max working pressure: 700 bar
- Proof pressure: 1050 bar
- Burst pressure: 2100 bar
- Working temperature: From -25 °C to +110 °C
- Compatibility with fluids: Mineral oils, Synthetic fluids HFB and HFC according to ISO 2943
- Degree protection: IP65 according to EN 60529

T2

Plug

Seal	Ordering code
HNBR	T2 H
FPM	T2 V

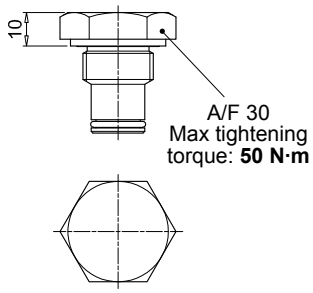

Materials
- Body:
  Phosphatized steel
- Seal:
  HNBR / FPM

T4

Plug

Seal	Ordering code
NBR	T4 A

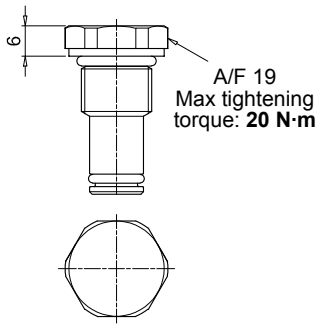

Materials
- Body:
  Anodized aluminium
- Seal:
  NBR

X2

Stainless Steel plug 420 bar

Seal	Ordering code
HNBR	X2 H
FPM	X2 V
MFQ	X2 F

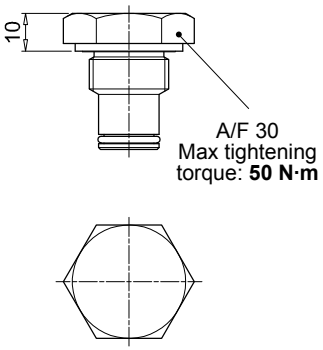

Materials
- Body:
  AISI 316L
- Seal:
  HNBR / FPM / MFQ

X3

Stainless Steel plug 700 bar (only for FZH)

Seal	Ordering code
HNBR	X3 H
FPM	X3 V
MFQ	X3 F

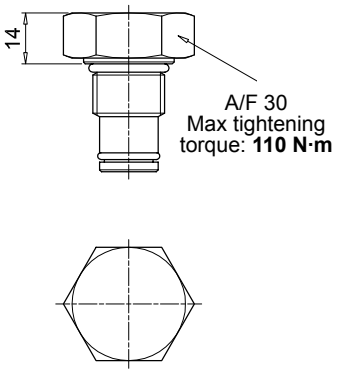

Materials
- Body:
  AISI 316L
- Seal:
  HNBR / FPM / MFQ

NOTES

All data, details and words contained in this publication are provided for use by technically qualified personnel at their discretion, without warranty of any kind.
MP Filtri reserves the right to make modifications to the models and versions of the described products at any time for both technical and/or commercial reasons.
For updated information please visit our website: *www.mpfiltri.com*
The colors and the pictures of the products are purely indicative.
Any reproduction, partial or total, of this document is strictly forbidden.
All rights are strictly reserved

WORLDWIDE NETWORK

CANADA • CHINA • FRANCE • GERMANY • INDIA • SINGAPORE
UNITED ARAB EMIRATES • UNITED KINGDOM • USA



MPFILTRI®

PASSION TO PERFORM

mpfiltri.com
Scan or click me!

MP Filtri reserves the right to make modifications to the models and versions of the described products at any time for both technical and/or commercial reasons.
For updated information please visit our website: www.mpfiltri.com. The colors and the pictures of the products are purely indicative.
Any reproduction, partial or total, of this document is strictly forbidden. All rights are strictly reserved

MF001000017
EN - 2026.04