AIR BREATHERS & FILLER PLUGS

TANK ACCESSORIES

CATALOGUE

MPFILTRI®

PASSION TO PERFORM

TANK ACCESSORIES

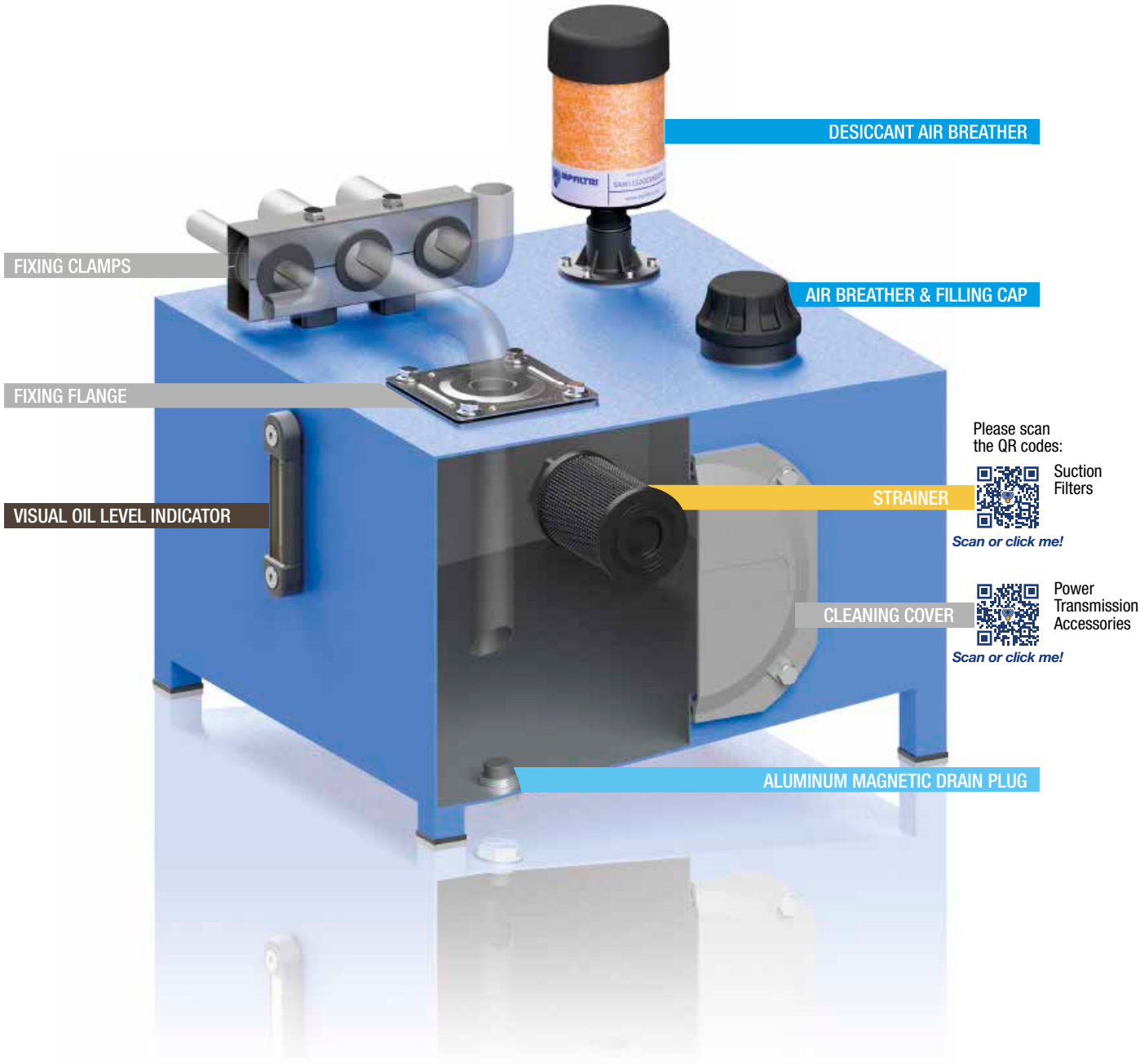

INDEX

page		
1	**INTRODUCTION**	
2	INDEX	
4	COMPANY PROFILE	
8	PRODUCT RANGE	
10	**AIR BREATHERS AND FILLER PLUGS**	
13	SAP 054-075 - SA	Air breathers
19	SAW 115	Moisture control desiccant air breathers
23	SCS	Metal air breathers with interchangeable filter element
29	SME 1 - SMF 1 - SML 1	Risers for breathers and filler caps installation
35	TA 46 - TAP 50 - SAP 50	Filler plug and air filter up to 200 l/min
43	TA 80	Steel filler plug and air filter up to 500 l/min
47	TAP 90	Filler plug and polyamide air filter up to 550 l/min
53	TAP 114	Filler plug and polyamide air filter up to 1600 l/min
57	TAP 115 & SAP 115	Filler plug and polyamide air filter up to 3000 l/min
62	**FILLER AND DRAIN PLUGS**	
65	TC 50	Polyamide filler plug
69	TKT - TSD - TKM	Filler and draining plugs
76	**VISUAL OIL LEVEL INDICATORS**	
79	LCP - LCC	Visual oil level indicator - round shape
85	LVA - LVU	Visual oil level indicator - vertical shape
90	**ELECTRICAL OIL LEVEL INDICATORS**	
93	LEN - LEG - LET - LEM - LEU	Electric oil level indicator
95	LVK	Visual and Electric oil level indicator
110	**ACCESSORIES**	
113	EM1	Pressure gauge isolator
119	SVM	Gauge selector valve
123	FTA - FTR	Oil tank fixing flange
127	MULTIFIT SFT	Fixing clamps

The complete series of air breathers and filler plugs makes it possible to meet all market demands.
Metal and plastic versions suitable for use on mobile and industrial equipment are available.

Filler plugs perform a dual function, air filtration at the tank inlet and prefiltration of the fluid by means of the basket, in order to prevent the ingress of foreign material into the tank during filling and top-up operations.
Correct operation of breather filters makes for longer life of the filter cartridges installed in the hydraulic circuit, and in applications where high level of contamination are present.
Desiccant breathers are also available to absorb free water and moisture contained in the air entering into the tank.

Air Breathers & Filler Plugs



SAP 054-075 - SA	page 13
SAW 115	19
SCS	23
SME 1 - SMF 1 - SML 1	29
TA 46 - TAP 50 - SAP 50	35
TA 80	43
TAP 90	47
TAP 114	53
TAP 115 - SAP 115	57

SAP 054-075 series

Polyamide air breather filter

SA series

Metal air breather filter



SAP 054-075 GENERAL INFORMATION

Technical data

Air breathers & Filler plugs

Polyamide air breather filter
Flow rate up to 400 l/min

SAP is a range of plastic air breathers for protection of the tank against the solid contamination contained into the air.
They are directly fitted on the tank.

Available features:
- Male threaded connections up to 3/4", for a maximum flow rate of 400 l/min
- Replaceable filter element
- Fine cellulose filtration, to get a good cleanliness level into the reservoir
- Polyester media is an option for heavy environmental conditions (high humidity, sand …)

Common applications:
- Mobile machines (construction and agriculture machines)
- Industrial equipment

Flow rate Δp 0.02 bar

	Flow rate [l/min]	
Filtration rating	L03	L10
SAP054	200	250
SAP075	350	400

Materials
- Cover: Polyamide
- Connection: Polyamide
- Filter element: Resin impregnated paper

Temperature
From -25 °C to +100 °C

Weight
SAP 054 - 0.06 kg
SAP 075 - 0.15 kg



Designation & Ordering code

COMPLETE AIR FILTER

Configuration example: SAP054 | G2 | L10 | A | P01

Series and size

SAP054	
SAP075	

Connections	SAP054	SAP075
G1	G 3/8"	G 1/2"
G2	G 1/2"	G 3/4"

Filtration rating

L03	Resin impregnated paper	3 µm
L10	Resin impregnated paper	10 µm

Seals

A	NBR

Execution

P01	MP Filtri standard
Pxx	Customized

FILTER ELEMENT

Configuration example: A4 | L10 | P01

Filter element series and size

A4	SAP054
A7	SAP075

Filtration rating

L03	Resin impregnated paper	3 µm
L10	Resin impregnated paper	10 µm

Execution

P01	MP Filtri standard
Pxx	Customized

SAP054

Connections	A/F [mm]
G1	22
G2	27

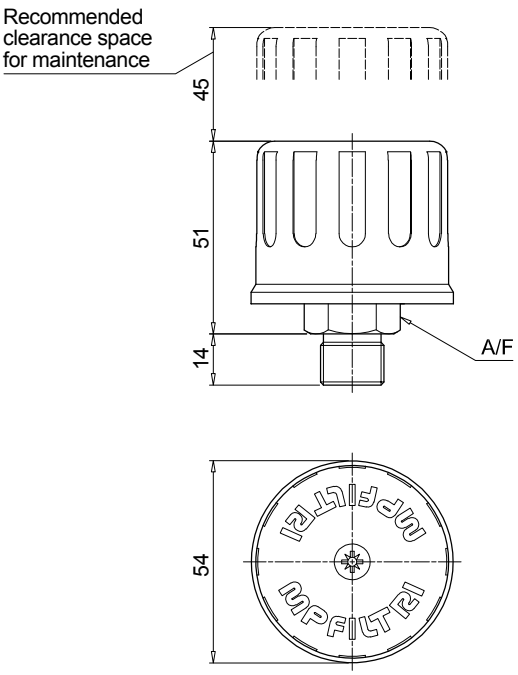

SAP075

Connections	A/F [mm]
G1	27
G2	32

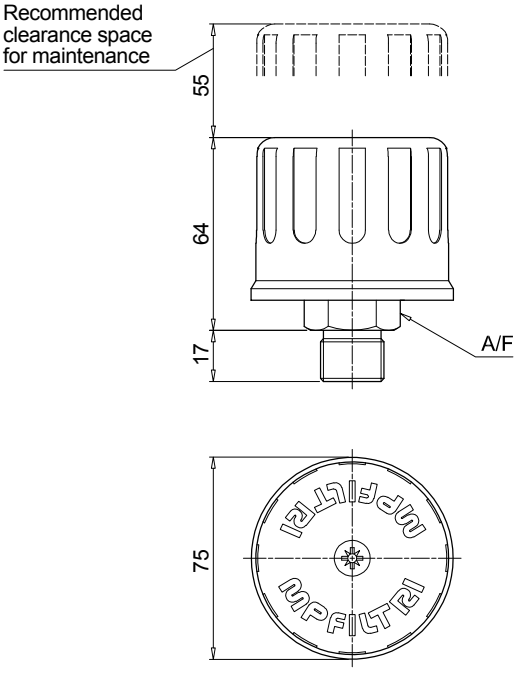

Technical data

Air breathers & Filler plugs

Metal air breather filter
Flow rate up to 2500 l/min

SA is a range of metal air breathers for protection of the tank against the solid contamination contained into the air.
They are directly fitted on the tank. The robust design allows the use of these filters in any heavy-duty application.

Available features:
- Male threaded connections up to 2 1/2", for a maximum flow rate of 2500 l/min
- Replaceable filter element
- Fine cellulose filtration, to get a good cleanliness level into the reservoir
- Polyester media is an option for heavy environmental conditions (high humidity, sand …)

Common applications:
- Mobile machines (construction and agriculture machines)
- Industrial equipment

Flow rate Δp 0.02 bar

	Flow rate [l/min]	
	Filtration rating L03	L10
SA036	140	140
SA053	250	250
SA075	350	400
SA115	800	850
SA145	1800	1850
SA185	2300	2500

Materials
- Cover: Steel
- Connection:
  SA 036 - SA 053: zinc-plated steel
  SA 075 - SA 115 - SA 145 - SA 185: anodized aluminium
- Filter element: Resin impregnated paper
- Screws: Galvanized steel
- Washer: Teflon
- Ring: Galvanized steel
- Seals: NBR

Temperature
From -25 °C to +100 °C

Weight

SA 036	0.08 kg
SA 053	0.15 kg
SA 075	0.26 kg
SA 115	0.40 kg
SA 145	0.59 kg
SA 185	1.22 kg

Designation & Ordering code

COMPLETE AIR BREATHER

Configuration example: SA115 | G1 | L10 | A | P01

Series and size

SA036 | **SA053** | **SA075** | **SA115** | **SA145** | **SA185**

Connections

	SA036	SA053	SA075	SA115	SA145	SA185
G1	G 1/4"	G 1/4"	G 1/2"	G 1"	G 1 1/2"	G 2 1/2"
G2	G 3/8"	G 3/8"	G 3/4"	-	-	-
G3	G 1/2"	-	-	-	-	-
G4	1/4" NPT	1/4" NPT	1/2" NPT	1" NPT	1 1/2" NPT	2 1/2" NPT
G5	3/8" NPT	3/8" NPT	3/4" NPT	-	-	-
G6	1/2" NPT	-	-	-	-	-

Filtration rating

L03	Resin impregnated paper	3 µm
L10	Resin impregnated paper	10 µm
S	Without filter element	

Seals

A	NBR

Execution

P01	MP Filtri standard
Pxx	Customized

FILTER ELEMENT

Configuration example: A8 | L10 | P01

Filter element series and size

A05 | **A5** | **A7** | **A8** | **A10** | **A11**

Filtration rating

L03	Resin impregnated paper	3 µm
L10	Resin impregnated paper	10 µm

Execution

P01	MP Filtri standard
Pxx	Customized

SA

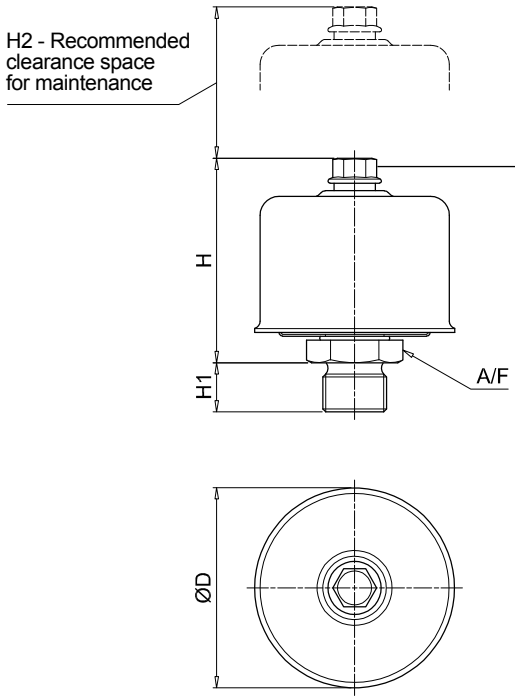

Tipe of bolt/nut

Phillips:
SA036

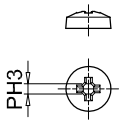

Hexagonal:
SA053
SA075
SA115
SA145

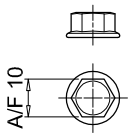

Wings:
SA185

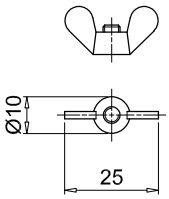

Type	Connections	ØD [mm]	H [mm]	H1 [mm]	H2 [mm]	A/F [mm]
036	G1 ÷ G6	36	37	13	30	22
053	G1-G2-G4-G5	53	53	13	50	22
075	G1	75	69	13	60	27
	G2			17		32
	G4			15		27
	G5			20		32
115	G1 - G4	115	80	17	70	38
145	G1 - G4	145	115	25	100	55
185	G1 - G4	185	164	25	150	90

SAW 115 series

Moisture control desiccant air breathers



SAW 115 GENERAL INFORMATION

Technical data

Air breathers & Filler plugs

Moisture control desiccant air breathers
Max air flow up to 453 l/min

SAW is a range of desiccant breathers; they are products that combine the filtration of the solid contamination and the absorption of the free water contained into the air.
They are directly fitted on the tank; the filter layers remove the solid contamination while the desiccant agent holds the moisture contained in the air that enters into the tank as result of the tank breathing.
While in service or during shut-down, the desiccant agent dries the equipment, absorbing moisture from the reservoir.

Available features:

- Male threaded connections up to 1", for a maximum flow rate of 453 l/min
- Fine filtration rating, to get a good cleanliness level into the reservoir
- Check valves, to extend the dryer agent lifetime.

Common applications:

Hydraulic systems, oil storage, tanks, transformers, renewable energy, Gearboxes.

Chemical Compatibility

Recommended:
- All Gear Oil
- Most Hydraulic Fluid
- Mineral and Synthetic Oil

Not Recommended:
- Phosphate Ester
- Hydrogen Sulphide
- Sulphuric Acid
- High Alkaline Cleaner

Flow rate Δp 0.02 bar

	Flow rate [l/min]
Filtration rating	03
SAW115	453

Materials

Connection: Polyamide
Internal Support Pipe: Polyamide
Screen: Polycarbonate
Cover: Polyamide
Dryer Agent: Silica Gel

Filter Efficiency 3 µm absolute (B_3 ≥200)

Seals NBR

Temperature From -25 °C to +90 °C

Humidity Level Below Ambient Conditions

SAW1153G03A00P01: protects 30.000 + cycles
Deliquescent: Protects 5.000 cycles
(Testing parameters 23°C, 30 l/min)

Silica Gel Weight

Length 1 0.32 kg
Length 2 0.56 kg
Length 3 0.84 kg

Total Weight

Length 1 0.60 kg
Length 2 0.90 kg
Length 3 1.20 kg



Designation & Ordering code

COMPLETE AIR FILTER

Configuration example: SAW115 | 1 | G | 03 | A | 0 | 0 | P01

Serie
SAW115

Length
1 | **2** | **3**

Connections
G 1" Multi-fit (NPT, BSPT, NPSM)

Filtration rating
03 Inorganic microfiber 3 µm

Seals
A NBR

Valve
0 Without valve
1 With check valves

Option
0 Standard

Execution
P01 MP Filtri standard
Pxx Customized

ACCESSORIES

Configuration example: SMG1 | S | A | P02

Serie
SMG1 Flanged adapter

Connections
S Without screws

Seals
A NBR

Execution
P02 MP Filtri standard

Dimensions

How does SAW Series works

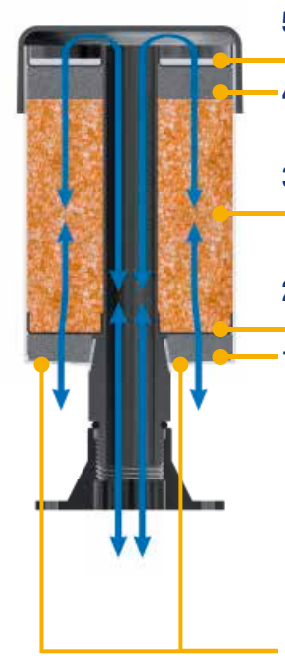

5 An additional filter layer stops dryer agent dust.

4 An additional air diffuser made of foam captures the oil mist.

3 The dryer agent adsorbs the moisture from the air.

2 The filter layer holds the solid contamination.

1 The air diffuser made of foam disperses the air.

THE DRYER AGENT EVEN WORKS DURING SYSTEM SHUT-DOWN ABSORBING THE MOISTURE FROM THE AIR.

The air comes into the equipment through the breather.

SAW115	
Length	**H [mm]**
1	154
2	205
3	256

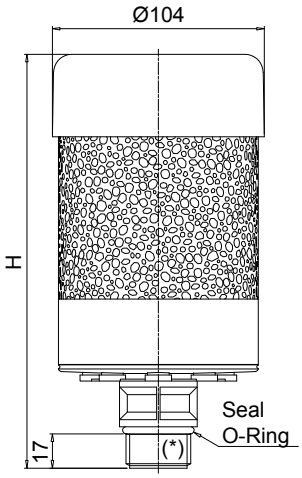

Optional 6-hole tank flange SMG1 type

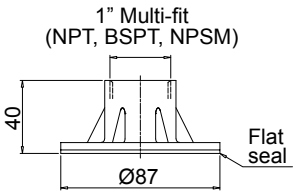

Holes on the tank

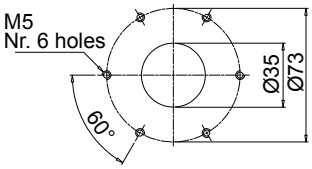

(*) 1" Multi-fit (NPT, BSPT, NPSM)

Silica gel

Active breather



Depleted breather



Silica gel is the most efficient and economic moisture adsorbent for general applications.

A white breather means the unit has done its job keeping moisture out of your lubricants.

Whenever the colour changes from orange to white it's time to replace the breather with a new one.

All breathers should be changed at least once a year.

IMPORTANT
Dispose of the exhausted silica gel according to the regulations in force in the country of use.

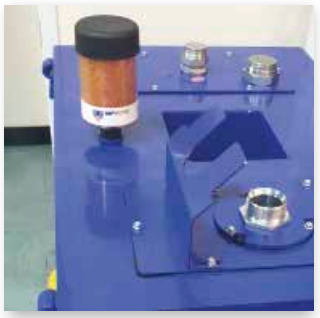

Air vent holes

Max hydraulic flow rate [l/min (cfm)]	Holes to open
up to 110 (4)	2
from 111 to 220 (4-8)	4
from 221 to 330 (8-12)	6
from 331 to 452 (12-16)	8

IMPORTANT INSTALLATION INFORMATION

- The air vent holes are plugged for any new breather
- The plugs protect the dryer agent during storage and shipment
- The plugs must be taken out during the installation, according to the max hydraulic flow rate



SCS series

Metal air breathers with interchangeable filter element



Technical data

Air breathers & Filler plugs

Metal air breathers with interchangeable filter element
Flow rate up to 1330 l/min

SCS is a range of air breathers for protection of the tank against the solid contamination contained into the air.
They are composed of a spin-on filter can screwed on a connection tube, directly fitted on the tank. They are directly fitted on the tank.

Available features:
- Weld or flanged connection, for a maximum flow rate of 1415 l/min
- Fine cellulose and microfibre filtration, to get a good cleanliness level into the reservoir

Common applications:
- Mobile machines (construction and agriculture machines)
- Industrial equipment

Flow rate Δp 0.02 bar

	Flow rate [l/min]		
Filtration rating	P10	A03	A10
SCS050	550	515	530
SCS070	550	515	530
SCS100	1415	1300	1330
SCS150	1415	1300	1330

Materials
Riser: Galvanized steel

Temperature
From -25 °C to +100 °C

Weight

SCS050...G1	0.200 kg
SCS050...G2	0.265 kg
SCS100...G1	0.450 kg
SCS100...G2	0.645 kg
CS/CG050	0.73 kg
CS/CG070	0.95 kg
CS100	1.3 kg
CS150	1.6 kg
CG100	1.3 kg
CG150	1.6 kg



Designation & Ordering code

COMPLETE AIR FILTER

Configuration example 1: SCS050 | C | G2 | | V | P01
Configuration example 2: SCS150 | C | G2 | A10 | V | P01

Series and size

SCS050	SCS070	SCS100	SCS150

Connections

C	Weld riser
F	Screwed flange

Threaded connection		SCS050 - 070	SCS100 - 150
G1	ISO 228	G 3/4”	G 1 1/4”
G2	U.S. standard	1” - 12 UNF	1 1/2” - 16 UN

Filtration rating		Size: 050	070	100	150
	Without filter element	•	-	•	-
A03	Inorganic microfiber 3 µm	•	•	•	•
A10	Inorganic microfiber 10 µm	•	•	•	•
P10	Resin impregnated paper 10 µm	•	•	•	•

Seals

A	NBR
V	FPM

Execution

P01	MP Filtri standard
Pxx	Customized

FILTER ELEMENT

Configuration example: CG | 150 | A10 | V | P01

Filter element series	Threaded connection:	G1	G2
CS	Connection ISO 228	•	-
CG	Connection U.S. standard	-	•

Filter element size

050	070	100	150

Filtration rating

A03	Inorganic microfiber	3 µm
A10	Inorganic microfiber	10 µm
P10	Resin impregnated paper	10 µm

Seals

A	NBR
V	FPM

Execution

P01	MP Filtri standard
Pxx	Customized

SCS050-070
Screwed flange

Size	H [mm]	H1 [mm]
050	199	146
070	263	210

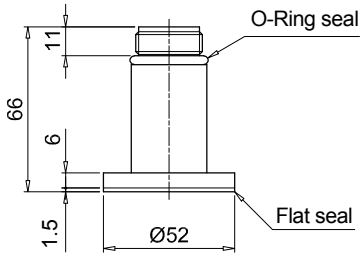

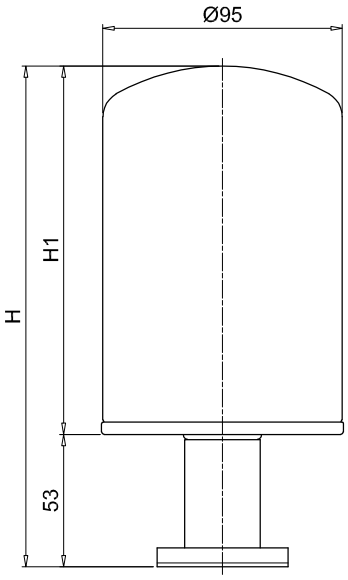

Holes on the tank

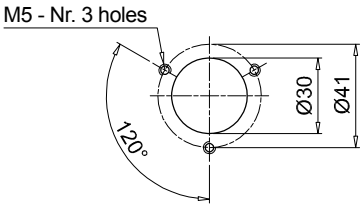

SCS050-070
Weld riser

Size	H [mm]	H1 [mm]
050	197	146
070	261	210

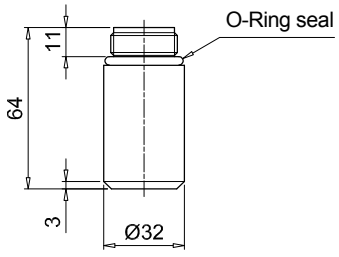

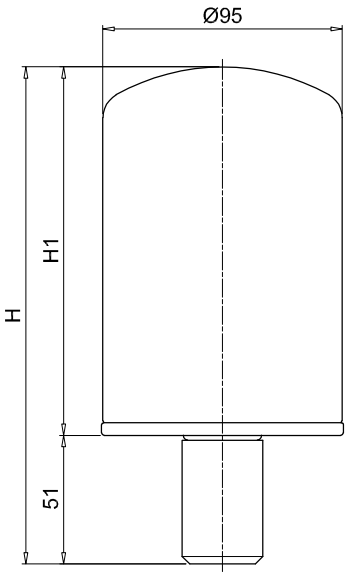

Dimensions

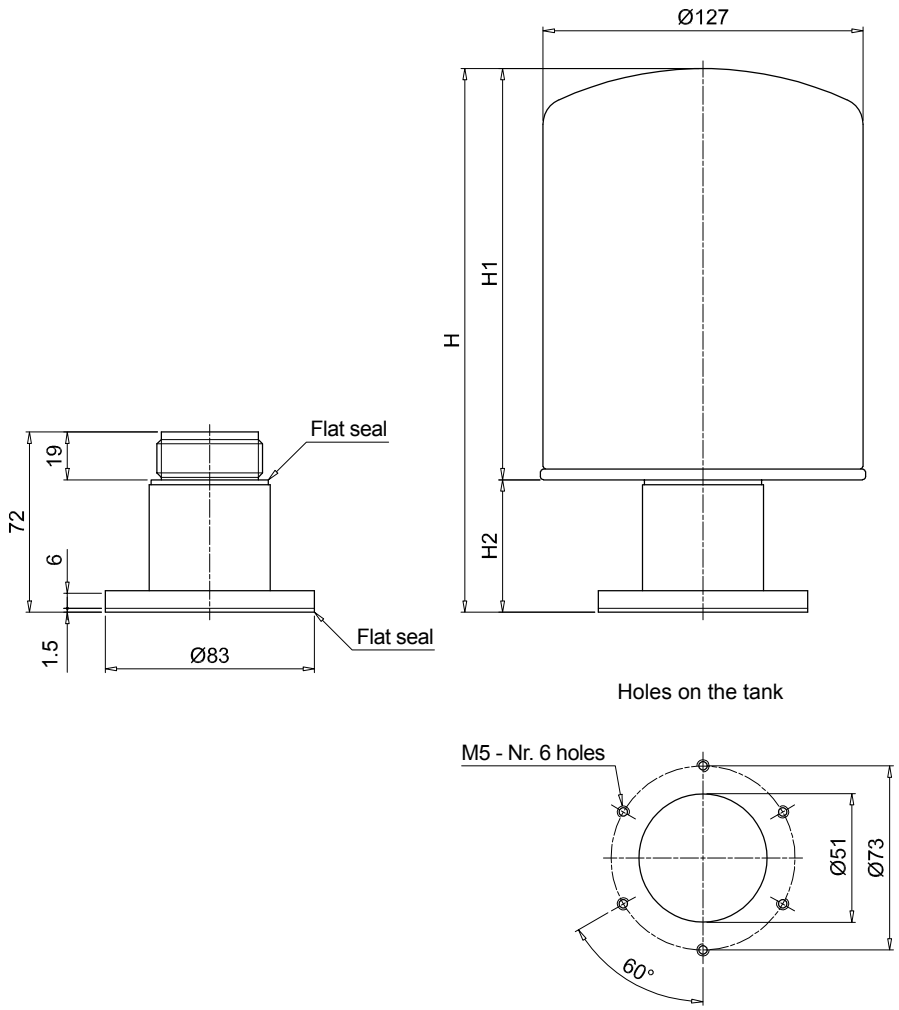

SCS100-150
Screwed flange

Size	Connections	H [mm]	H1 [mm]	H2 [mm]
100	G1	231	178	53
	G2	215	184	31
150	G1	280	227	53
	G2	301	270	31

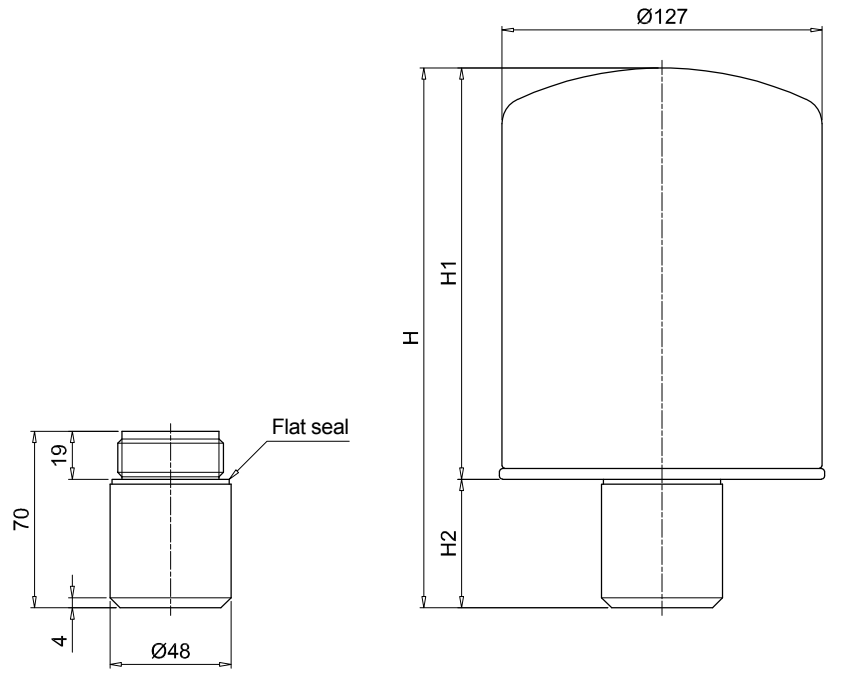

SCS100-150
Weld riser

Size	Connections	H [mm]	H1 [mm]	H2 [mm]
100	G1	229	178	51
	G2	213	184	29
150	G1	278	227	51
	G2	299	270	29

SME 1 - SMF 1 - SML 1 series

Risers for breathers and filler caps installation



Technical data

Air breathers & Filler plugs

Risers for breathers and filler caps installation

SME/SMF/SML are ranges of risers for installation of the breathers and filler caps in any place on the tank.
They make the maintenance operation easy and fast.

Available features:
- SME: vertical riser made of polyamide for polyamide tanks, mainly used in the mobile machines
- SMF: sloping riser made of polyamide for polyamide tanks, mainly used in the mobile machines
- SML: sloping riser made of aluminum for metal tanks, mainly used in the industrial equipment and heavy-duty applications

Materials SME
- Body: Polyamide
- Seals: NBR
- Screws: Galvanized steel

Materials SMF
- Body: Polyamide
- Seals: NBR
- Screws: Galvanized steel

Materials SML
- Body: Aluminium
- Seals: NBR
- Screws: Galvanized steel

Temperature
From -25 °C to +100 °C

Weight
SME 0.250 kg
SMF 0.325 kg
SML 0.380 kg



Designation & Ordering code

COMPLETE ADAPTER

Configuration example: SMF1 | M | A | P01

Series	
SME1	Polyamide vertical riser
SMF1	Polyamide sloping riser
SML1	Aluminium sloping riser

Connections	
M	Metric screws
U	UNC screws

Seals	
A	NBR

Execution		Series SME1	SMF1	SML1
P01	MP Filtri standard	-	•	•
P02	Standard without logo	•	-	-

SME1

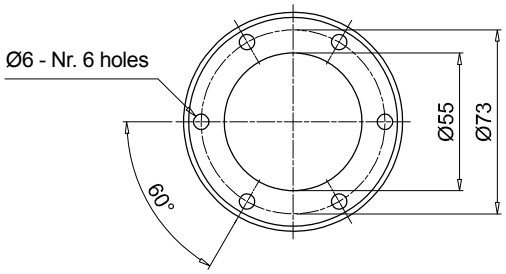

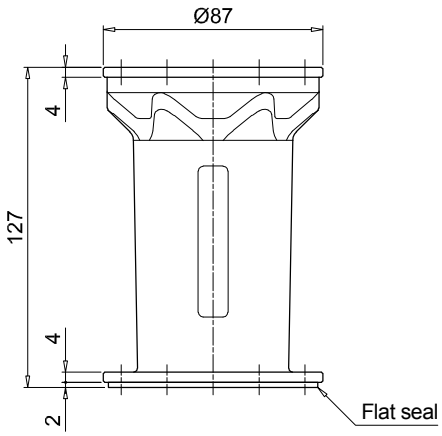

Holes on the flange

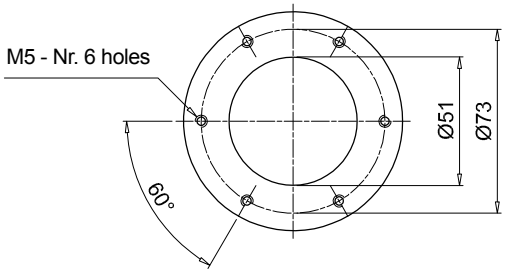

SME 1 - SMF 1 - SML 1

Dimensions

SMF1

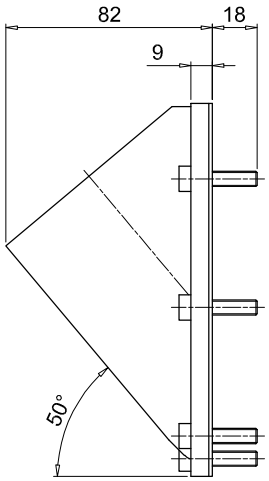

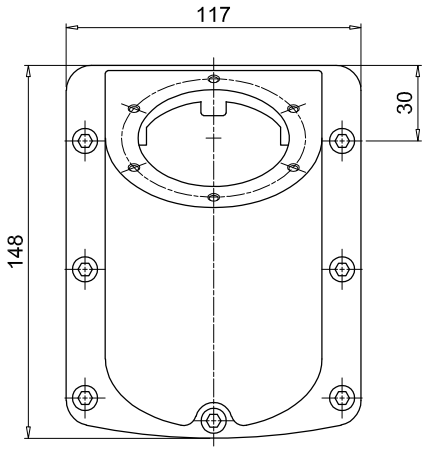

Holes on the tank

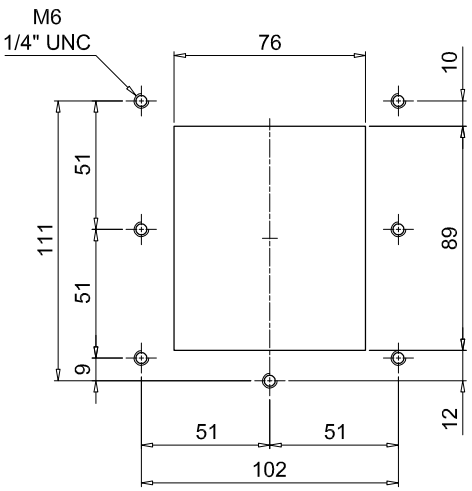

Holes on the flange

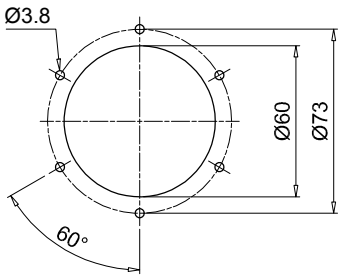

SML1

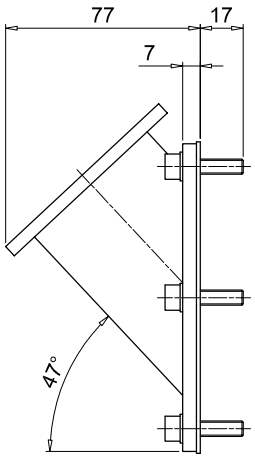

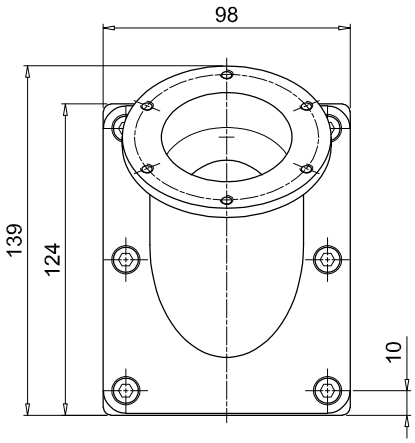

Holes on the tank

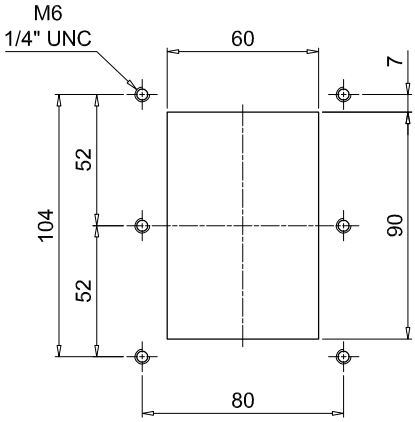

Holes on the flange

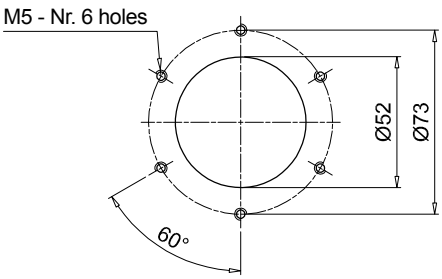

TA 46 TAP 50 SAP 50 series

Steel filler plug and air filter

Polyamide filler plug

Polyammide air filter



Technical data

Air breathers & Filler plugs

Steel filler plug and air filter
Flow rates up to 200 l/min

TA46 is a range of compact metal air breathers and filler caps for protection of the tank against the solid contamination contained into the air and filling of the fluid into the systems during the commissioning and maintenance procedures. They are directly fitted on the tank. The robust design allows the use of these filters in any heavy-duty application.

Available features:
- Male threaded connections up to 1/4" and flanged connection with bayonet, for a maximum flow rate of 200 l/min
- Fine cellulose filtration, to get a good cleanliness level into the reservoir
- Filling basket, to hold the coarse contamination contained into the fluid and to diffuse the fluid flow into the tank

Common applications:
- Compact hydraulic systems
- Compact mobile machines
- Industrial equipment

Flow rate Δp 0.02 bar

	Flow rate [l/min]	
Filtration rating	03	10
TA46	150	200

Materials (version G/N)
- Cover: Chrome plated steel
- Filter element: Resin impregnated paper, Polyurethane
- Flange: Galvanized steel
- Connection: Phosphatized steel

Materials (version B)
- Cover: Chrome plated steel
- Filter element: Resin impregnated paper, Polyurethane
- Flange: Galvanized steel
- Connection: Galvanized steel
- Seals: NBR
- Chain: Brass
- Screws: Galvanized steel
- Basket: Galvanized steel

Temperature
From -25 °C to +100 °C

Weight
TA 46 B 0.10 kg
TA 46 G/N 0.11 kg



Designation & Ordering code

COMPLETE FILLER PLUG

Configuration example 1:	TA46	B	03	A	0	0	1	P01
Configuration example 2:	TA46	G	10					P01

Serie
TA46

Connections

B	Screwed flange with bayonet mount
G	G 1/4"
N	1/4" NPT

Filtration rating

03	Resin impregnated paper	3 µm
10	Polyurethane	10 µm

Seals	Connection:	B	G	N
A NBR		•	-	-

Valve	Connection:	B	G	N
0 Without valve		•	-	-

Version	Connection:	B	G	N
0 Standard		•	-	-

Basket	Connection:	B	G	N
1 With basket		•	-	-

Execution

P01	MP Filtri standard
Pxx	Customized

TA46

Screwed flange

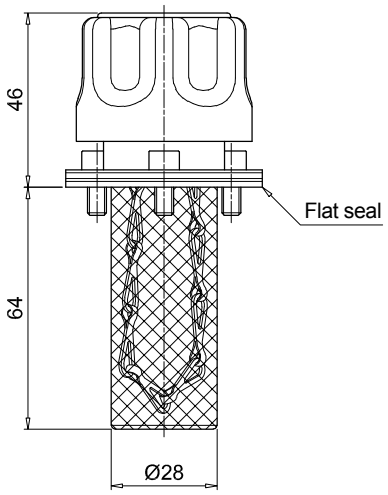

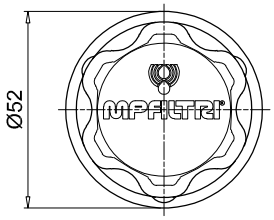

Holes on the tank

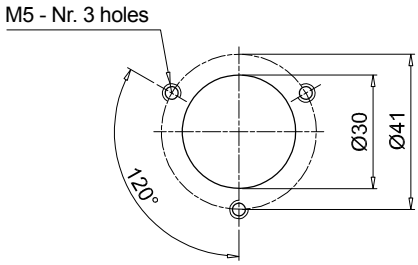

TA46

Threaded connection

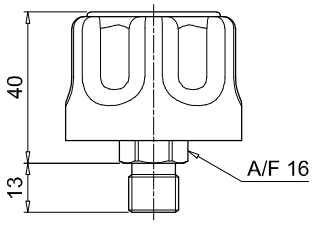

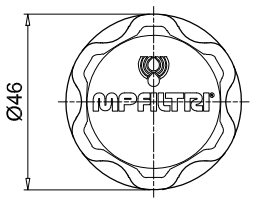

TAP 50 GENERAL INFORMATION

Technical data

Air breathers & Filler plugs

Filler plug and polyamide air filters
Flow rates up to 200 l/min

TAP50 is a range of compact plastic air breathers and filler caps for protection of the tank against the solid contamination contained into the air and filling of the fluid into the systems during the commissioning and maintenance procedures.

Available features:
- Flanged connection with bayonet, for a maximum flow rate of 200 l/min
- Fine cellulose filtration, to get a good cleanliness level into the reservoir
- Filling basket, to hold the coarse contamination contained into the fluid and to diffuse the fluid flow into the tank
- Pressurization valve, to guarantee a positive pressure into the tank

Common applications:
- Compact hydraulic systems
- Compact mobile machines
- Industrial equipment

Flow rate Δp 0.02 bar

Flow rate [l/min]		
Filtration rating	03	10
TAP50	180	202

Materials
- Cover/ringnut: Polyamide
- Filter element: Resin impregnated paper, Polyurethane
- Pressurization valve: Polyamide, Galvanized steel, NBR
- Seals: NBR
- Flange: Polyamide
- Screws: Galvanized steel
- Basket: Polyamide

Temperature
From -25 °C to +100 °C

Weight
TAP 50 0.60 kg

Quantity
10 pcs/pack



Designation & Ordering code

COMPLETE FILLER PLUG

Configuration example: TAP50 | C | 03 | A | 1 | 1 | P01

Serie
TAP50

Connections
C Screwed flange with G 3/4" mount

Filtration rating
03 Resin impregnated paper 3 µm
10 Polyurethane 10 µm

Seals
A NBR

Valve
0 Without valve
1 0.5 bar pressurization valve

Basket
1 With basket

Execution
P01 MP Filtri standard
Pxx Customized

TAP50

Screwed flange

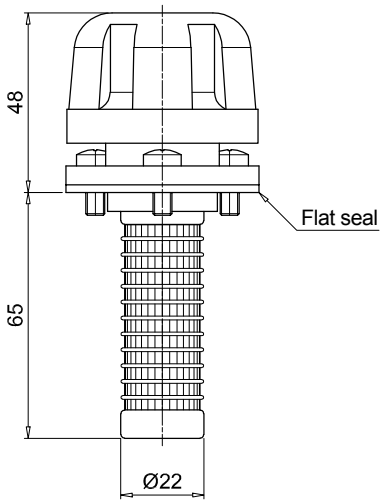

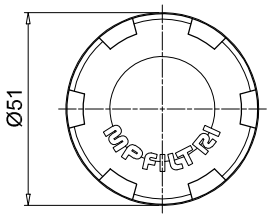

Holes on the tank

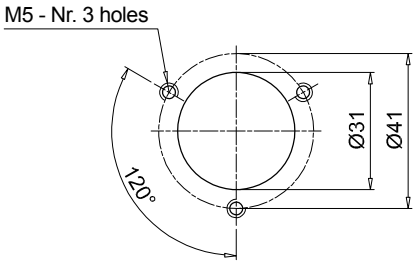

SAP 50 GENERAL INFORMATION

Technical data

Air breathers & Filler plugs

Air breathers
Flow rates up to 200 l/min

SAP50 is a range of compact plastic air breathers for protection of the tank against the solid contamination contained into the air.
They are directly fitted on the tank.

Available features:
- Male threaded connections up to 3/4", for a maximum flow rate of 200 l/min
- Fine cellulose filtration, to get a good cleanliness level into the reservoir
- Pressurization valve, to guarantee a positive pressure into the tank

Common applications:
- Compact hydraulic systems
- Compact mobile machines
- Industrial equipment

Flow rate Δp 0.02 bar

	Flow rate [l/min]	
Filtration rating	03	10
SAP50	180	204

Materials
- Cover/Connection: Polyamide
- Filter element: Resin impregnated paper, Polyurethane
- Pressurization valve: Polyamide, Galvanized steel, NBR
- Seals: NBR

Temperature
From -25 °C to +100 °C

Weight
SAP 50 0.40 kg

Quantity
10 pcs/pack



Designation & Ordering code

COMPLETE AIR FILTER

Configuration example: SAP50 | G3 | L03 | A | 1 | 0 | P01

Serie
SAP50

Connections
G2 G 3/8"
G3 G 1/2"
G4 G 3/4"

Filtration rating
L03 Resin impregnated paper 3 µm
L10 Polyurethane 10 µm

Seals
A NBR

Valve
0 Without valve
1 0.5 bar pressurization valve

Basket
0 Without basket

Execution
P01 MP Filtri standard
Pxx Customized

SAP50		
Threaded connection		
Connections	**D1 [mm]**	**ØD2 [mm]**
G2	G 3/8”	17
G3	G 1/2”	21.5
G4	G 3/4”	26.7

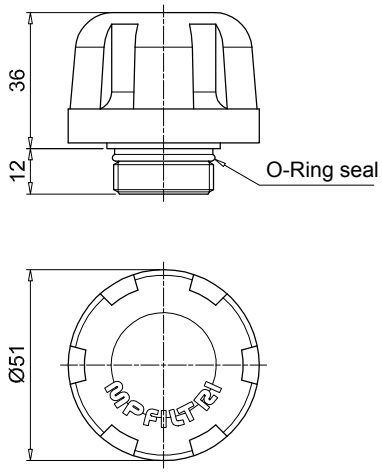

Housing on the tank

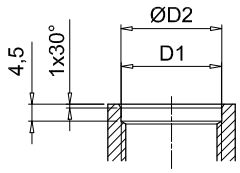

TA 80 series

Steel filler plug and air filter up to 550 l/min



TA 80 GENERAL INFORMATION

Technical data

Air breathers & Filler plugs

Steel filler plug and air filter
Flow rates up to 550 l/min

TA80 is a range of metal air breathers and filler caps for protection of the tank against the solid contamination contained into the air and filling of the fluid into the systems during the commissioning and maintenance procedures.
They are directly fitted on the tank. The robust design allows the use of these filters in any heavy-duty application.

Available features:

- Male threaded connections up to 3/4" and flanged connection with bayonet, for a maximum flow rate of 550 l/min
- Fine cellulose filtration, to get a good cleanliness level into the reservoir
- Pressurization valve with different setting, to guarantee a positive pressure into the tank in any application with metal or plastic tanks
- Padlock tab, to secure the air breather to the tank
- Filling basket, to hold the coarse contamination contained into the fluid and to diffuse the fluid flow into the tank
- Anti-splash, to avoid fluid coming out through the air breather due to sloshing

Common applications:

- Hydraulic systems
- Mobile machines
- Industrial equipment

Flow rate Δp 0.02 bar

	Flow rate [l/min]	
Filtration rating	03	10
TA80	450	550

Materials

- Cover: Chrome Plated steel
- Filter element: Resin impregnated paper, Polyurethane
- Pressurization valve: Polyamide (bodies), Galvanized steel (end cap - disk), Steel (spring), NBR (seals)
- Flange and anti-splash feature: Galvanized steel
- Seals: NBR
- Screws, Flange: Galvanized steel
- Chain, Ring: Brass
- Basket (only TA80B): Galvanized steel

Temperature

From -25 °C to +100 °C

Weight

L 80 mm 0.33 kg
L 100 mm 0.35 kg



Designation & Ordering code

COMPLETE FILLER PLUG / COMPLETE AIR FILTER

Configuration example 1:	TA80	B	03	A	0	L	1	P01
Configuration example 2:	TA80	G	10	A	2			P01

Serie

TA80

Connections

B	Screwed flange with bayonet mount	**G**	G 3/4"
D	Weld flange with bayonet mount	**N**	3/4" NPT

Filtration rating		Connection: B	D	G	N
00	Without filter (blind filler plug)	•	•	-	-
03	Resin impregnated paper 3 µm	•	•	•	•
10	Polyurethane 10 µm	•	•	•	•

Seals

A	NBR

Valve	Filtration rating: 00	03	10
0 Without valve	•	•	•
1 0.3 bar pressurization valve	-	•	•
2 0.7 bar pressurization valve	-	•	•
9 With anti-splash feature	-	•	•

Version	Connection: B	D	G	N
0 Standard	•	•	-	-
L With padlock tab	•	-	-	-

Basket	Connection: B	D	G	N
0 Without basket	•	•	-	-
1 With basket 80 mm	•	-	-	-
3 With basket 100 mm	-	•	-	-

Execution

P01	MP Filtri standard
Pxx	Customized

TA80

Screwed flange

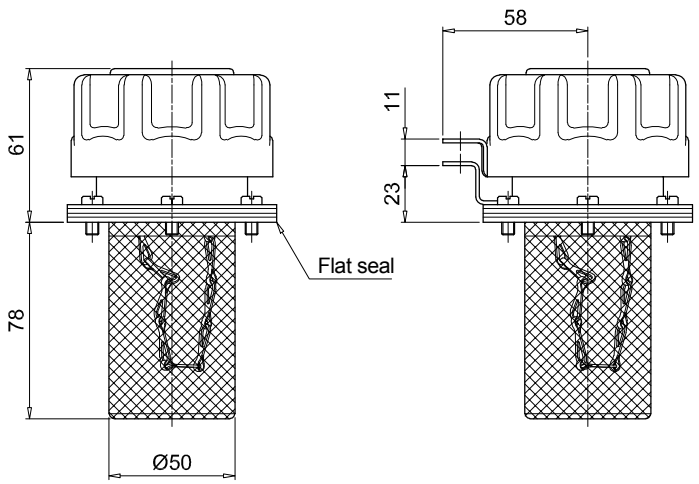

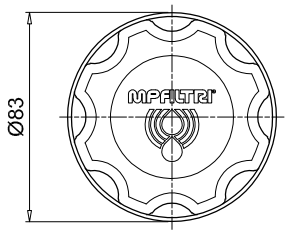

With padlock tab

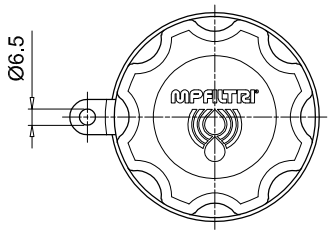

Holes on the tank

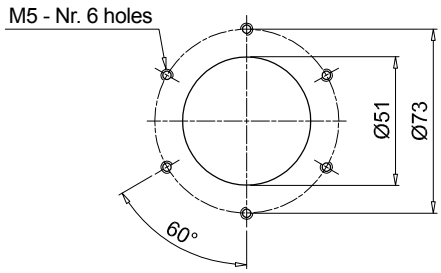

TA80

Weld flange

Threaded connection

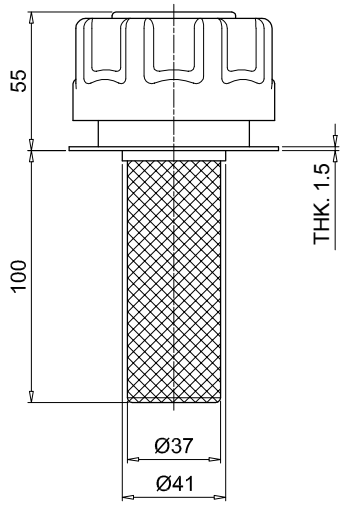

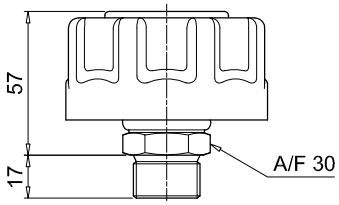

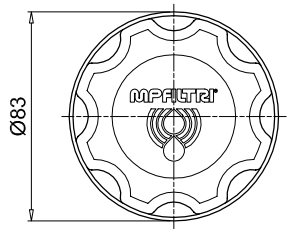

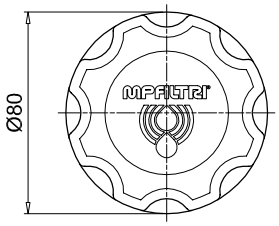

TAP 90 series

Filler plug and polyamide air filter up to 550 l/min



Technical data

Air breathers & Filler plugs

Filler plug and polyamide air filters
Flow rates up to 550 l/min

TAP90 is a range of plastic air breathers and filler caps for protection of the tank against the solid contamination contained into the air and filling of the fluid into the systems during the commissioning and maintenance procedures.
They are directly fitted on the tank.

Available features:
- Male threaded connections up to 1 1/2" and flanged connection with bayonet, for a maximum flow rate of 550 l/min
- Fine cellulose filtration, to get a good cleanliness level into the reservoir
- Pressurization valve with different setting, to guarantee a positive pressure into the tank in any application with metal or plastic tanks
- Padlock tab, to secure the air breather to the tank
- Filling basket, to hold the coarse contamination contained into the fluid and to diffuse the fluid flow into the tank
- Dipstick, to monitor the fluid level into the tank even in complicated positions

Common applications:
- Hydraulic systems
- Mobile machines
- Industrial equipment

Flow rate Δp 0.02 bar

	Flow rate [l/min]	
Filtration rating	03	10
TAP90	450	550

Materials
- Cover/Ringnut: Polyamide
- Filter element: Resin impregnated paper, Polyurethane
- Pressurization valve: Polyamide (bodies), Galvanized steel (end cap - disk), NBR (seals)
- Flange B: Polyamide
- Seals: NBR
- Screws: Galvanized steel
- Padlock tab: Galvanized steel
- Chain, Ring: Brass
- Dipstick: Phosphatized steel
- Basket: Galvanized steel, Polyamide

Temperature
From -25 °C to +100 °C

Weight
L 120 mm 0.25 kg
L 250 mm 0.31 kg



Designation & Ordering code

COMPLETE BREATHER PLUG

Configuration example 1:	TAP90	R	03	A	1	A	1	P01
Configuration example 2:	TAP90	G	10	A	2	L		P01

Serie
TAP90

Connections

R	Screwed flange with M52x2 mount	**H**	G 1 1/2"
F	Screwed flange DIN 24557-2	**M**	3/4" NPT
C	Weld riser	**G**	M52x2
		Q	G 3/4"

Filtration rating

		Connection R	F	C	Q	H	M	G
00	Without filter (blind filler plug)	•	•	•	-	-	-	-
03	Resin impregnated paper	3 µm	•	•	•	•	•	•	•
10	Polyurethane	10 µm	•	•	•	•	•	•	•

Seals

A	NBR

Valve

		Filtration rating: 00	03	10
0	Without valve	•	•	•
1	0.3 bar pressurization valve	-	•	•
2	0.7 bar pressurization valve	-	•	•

Version

0	Standard	**A**	With dipstick
L	With padlock tab	**F**	With padlock tab and dipstick

Basket

		Connection R	F	C	Q	H	M	G
0	Without basket	•	•	•	-	-	-	-
1	With basket 120 mm	•	•	•	-	-	-	-
3	With basket 250 mm	•	•	•	-	-	-	-

Execution

P01	MP Filtri standard
Pxx	Customized

TAP90

Screwed flange

Basket	H1 [mm]
1	120
3	250

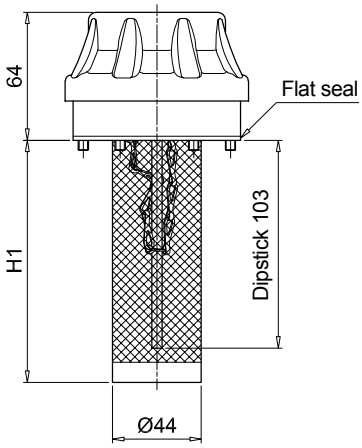

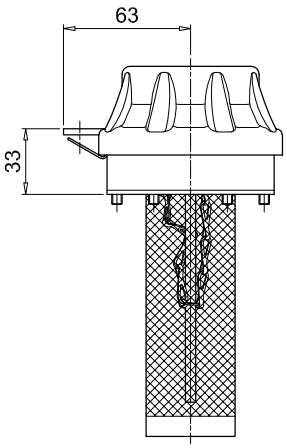

With padlock tab

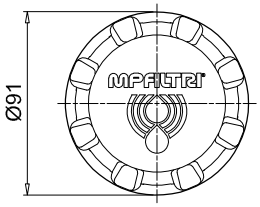

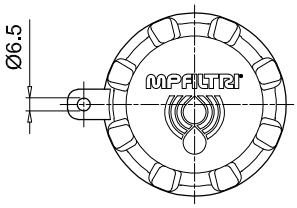

Holes on the tank

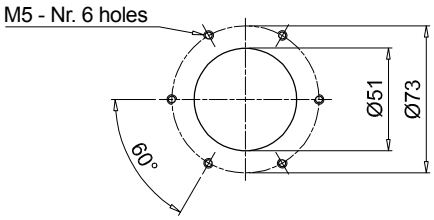

TAP90

Screwed flange

DIN 24557-2

Basket	H1 [mm]
1	120
3	250

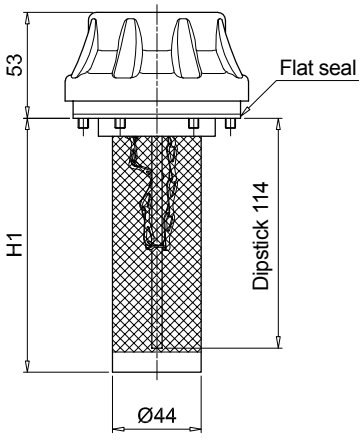

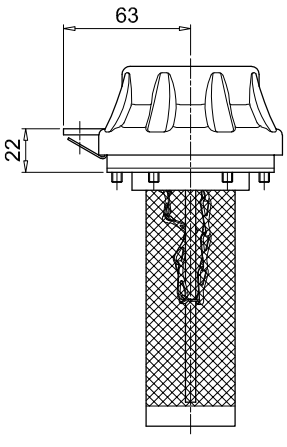

With padlock tab

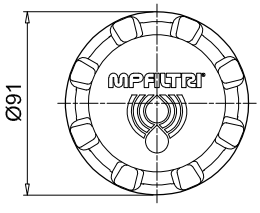

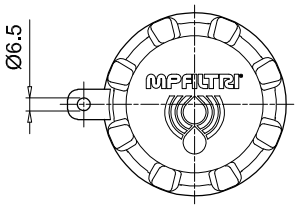

Holes on the tank

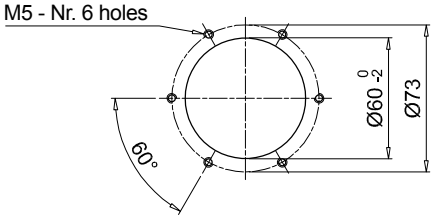

TAP 90

Dimensions

TAP90

Weld riser

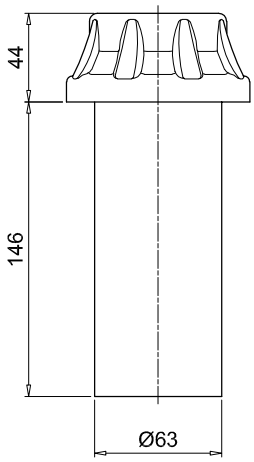

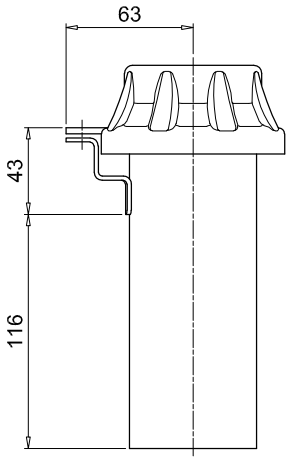

With padlock tab

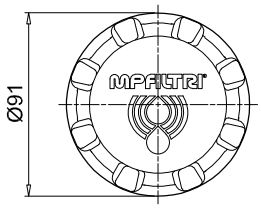

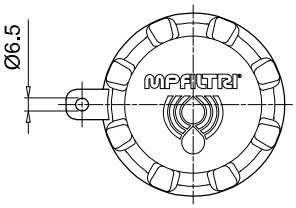

TAP90

Threaded connection

Connections	D1 [mm]	D2 [mm]	J [mm]	K [mm]
Q	G 3/4"	-	-	-
H	G 1 1/2"	48.5	8.5	2x15°
M	3/4" NPT	-	-	-
G	M 52x2	52.5	8.5	2x15°

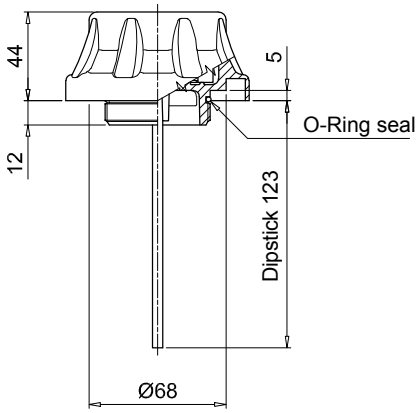

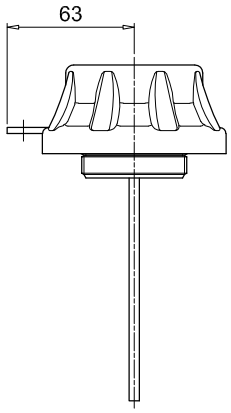

With padlock tab

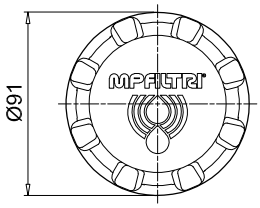

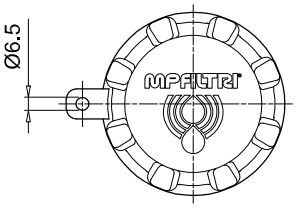

Housing on the tank
for connections G - H - M - Q

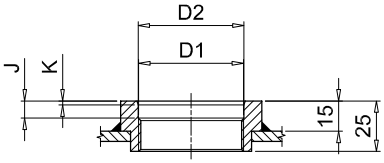

TAP 114 series

Filler plug and polyamide air filter up to 1600 l/min

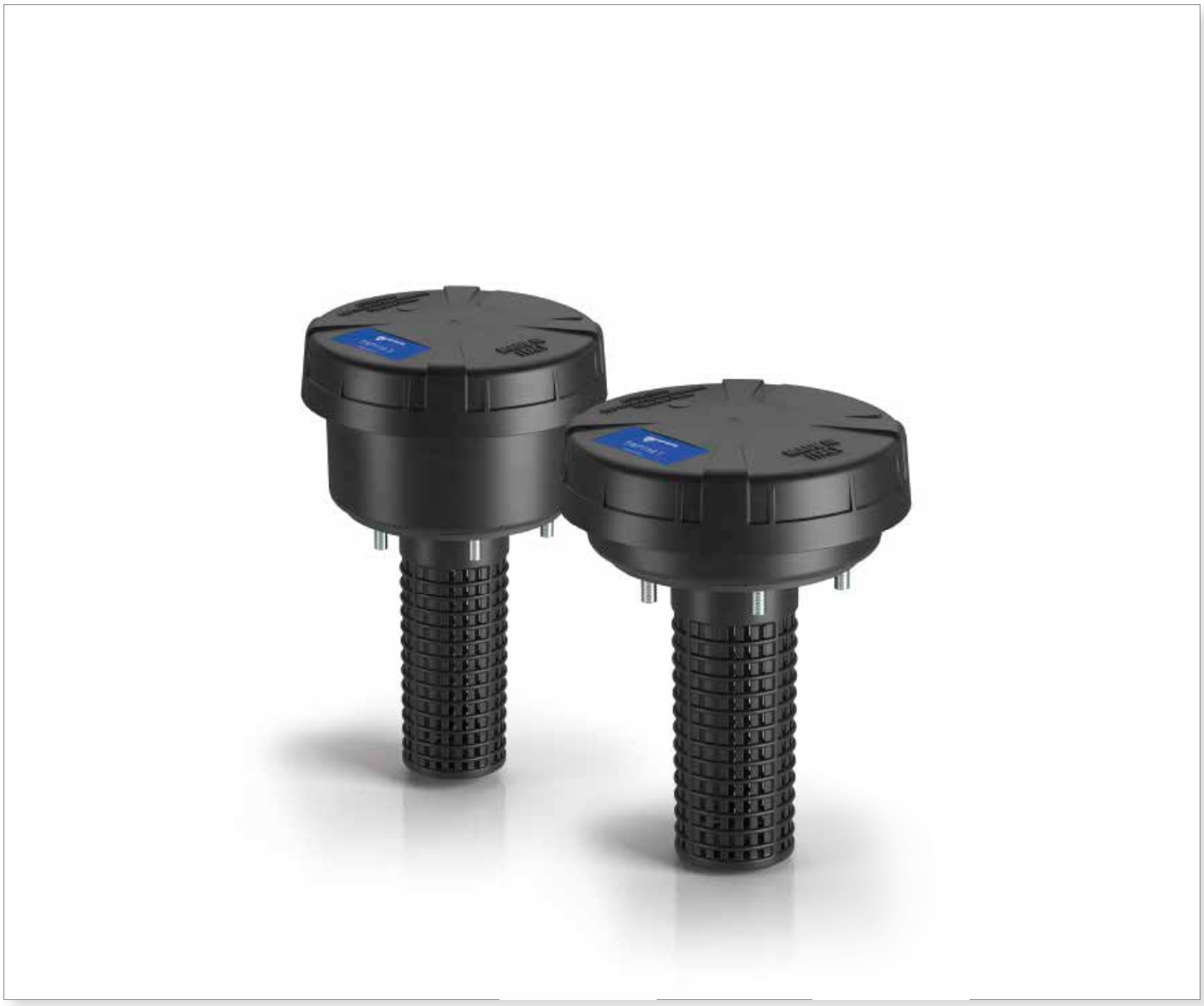

TAP 114 GENERAL INFORMATION

Technical data

Air breathers & Filler plugs

Filler plug and polyamide air filters
Flow rates up to 1600 l/min

TAP114 is a range of plastic large air breathers and filler caps for protection of the tank against the solid contamination contained into the air and filling of the fluid into the systems during the commissioning and maintenance procedures.
They are directly fitted on the tank.

Available features:

- Flanged connection, for a maximum flow rate of 1600 l/min
- Replaceable filter element
- Fine cellulose filtration, to get a good cleanliness level into the reservoir
- Polyester media is an option for heavy environmental conditions (high humidity, sand ….)
- Filling basket, to hold the coarse contamination contained into the fluid and to diffuse the fluid flow into the tank
- Anti-splash, to avoid fluid coming out through the air breather due to sloshing

Common applications:

- Hydraulic systems
- Mobile machines
- Industrial equipment

Flow rate Δp 0.02 bar

		Flow rate [l/min]	
	Length	standard	with anti-splash
TAP114	**1**	1450	480
TAP114	**3**	1600	530

Materials

- Cover: Polyamide
- Filter element: Resin impregnated paper
- Flange: Polyamide
- Seals: NBR
- Screws: Galvanized steel
- Basket: Polyamide

Temperature

From -25 °C to +100 °C

Weight

TAP 114 length 1 0.185 kg
TAP 114 length 3 0.200 kg



Designation & Ordering code

COMPLETE FILLER PLUG / COMPLETE AIR FILTER

Configuration example: TAP114 | 1 | L10 | A | 3 | P01

Series
TAP114

Length
1 | **3**

Filtration rating
L10 Resin impregnated paper 10 µm

Seals
A NBR

Version
1 With basket
3 With basket + anti-splash feature

Execution
P01 MP Filtri standard
Pxx Customized

FILTER ELEMENT

Configuration example: A114 | 1 | L10 | P01

Filter element series
A114

Length
1 | **3**

Filtration rating
L10 Resin impregnated paper 10 µm

Execution
P01 MP Filtri standard
Pxx Customized

Dimensions

TAP114		
Length	**H [mm]**	**H2 [mm]**
1	44	30
3	71	60

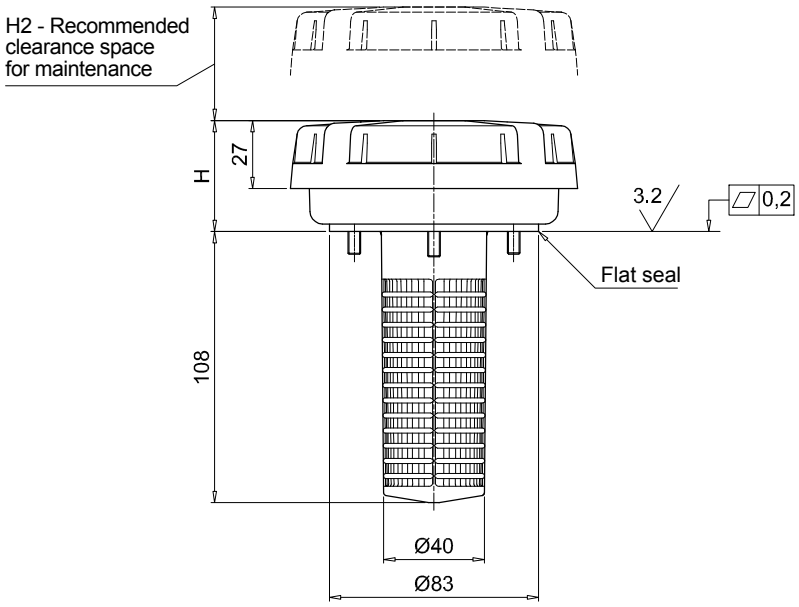

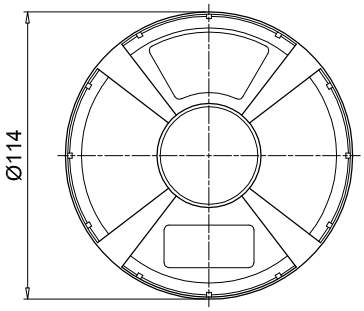

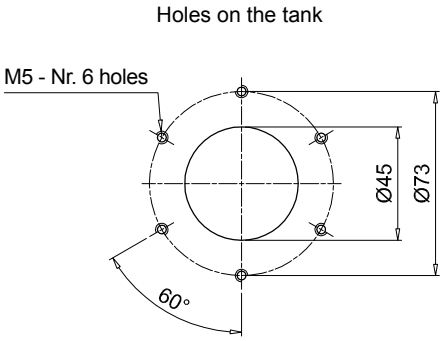

Version with anti-splash feature



TAP 115 - SAP 115

Filler plug and polyamide air filter up to 3000 l/min



TAP 115 GENERAL INFORMATION

Technical data

Air breathers & Filler plugs

Filler plug and polyamide air filters
Flow rates up to 2150 l/min

TAP115 is a range of plastic large air breathers and filler caps for protection of the tank against the solid contamination contained into the air and filling of the fluid into the systems during the commissioning and maintenance procedures.
They are directly fitted on the tank.

Available features:

- Flanged connection, for a maximum flow rate of 2150 l/min
- Replaceable filter element.
- Fine cellulose and microfibre filtration, to get a good cleanliness level into the reservoir. Polyester media is an option for heavy environmental conditions (High humidity, sand ….)
- Visual clogging indicator
- Filling basket, to hold the coarse contamination contained into the fluid and to diffuse the fluid flow into the tank

Common applications:

- Hydraulic systems
- Mobile machines
- Industrial equipment

Flow rate Δp 0.02 bar

	Flow rate [l/min]	
Filtration rating	A03	L10
TAP115 length 1	1600	2000
TAP115 length 2	2150	2150

Materials

- Cover/flange: Polyamide
- Filter element: Microfibre, Resin impregnated paper
- Seals: NBR, FPM
- Basket/screws: Galvanized steel

Clogging indicators

- Manual reset
- Set pressure 0.062 bar ±10%

Temperature

From -25 °C to +100 °C

Weight

TAP 115 length 1 0.460 kg
TAP 115 length 2 0.585 kg



Designation & Ordering code

COMPLETE FILLER PLUG / COMPLETE AIR FILTER

Configuration example: TAP115 | 2 | F | A03 | A | 1 | A | P01

Series
TAP115

Length
1 | **2**

Connections
F Flange

Filtration rating
A03 Inorganic microfiber 3 µm
L10 Resin impregnated paper 10 µm

Seals
A NBR **V** FPM

Version
1 With basket

Clogging indicator
A Without indicator
B With visual clogging indicator

Execution
P01 MP Filtri standard
Pxx Customized

FILTER ELEMENT

Configuration example: A115 | 2 | A03 | P01

Filter element series
A115

Length
1 | **2**

Filtration rating
A03 Inorganic microfiber 3 µm
L10 Resin impregnated paper 10 µm

Execution
P01 MP Filtri standard
Pxx Customized

TAP115		
Length	**H [mm]**	**H2 [mm]**
1	91	55
2	155	80

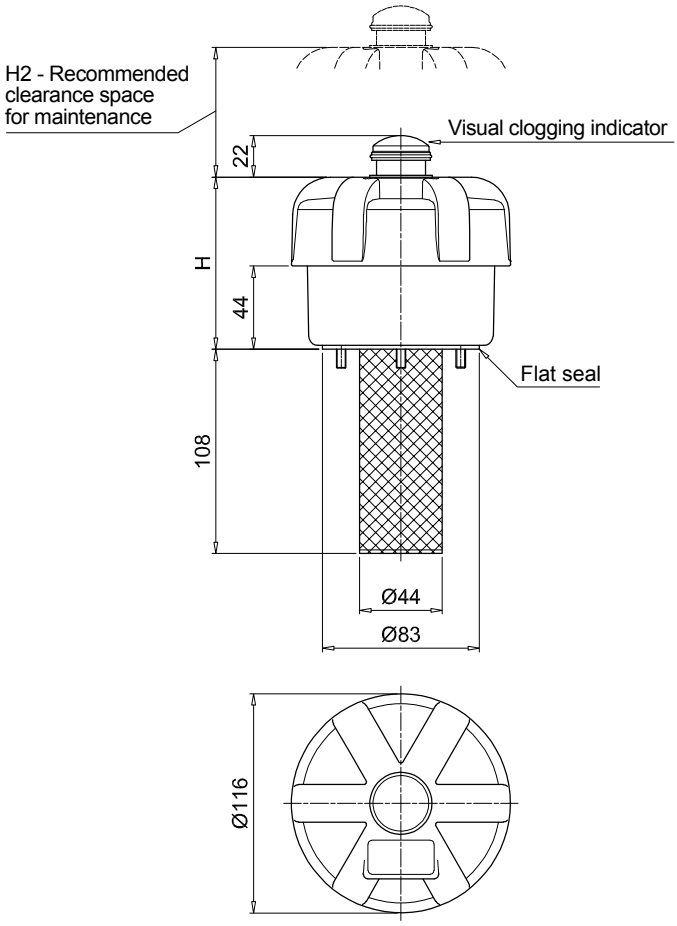

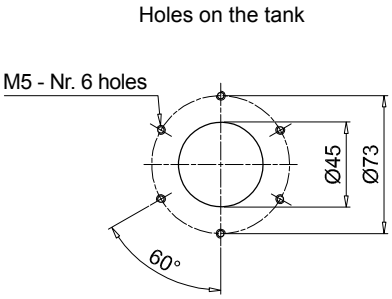

Air breathers & Filler plugs

Filler plug and polyamide air filters
Flow rates up to 3000 l/min

SAP115 is a range of plastic large air breathers for protection of the tank against the solid contamination contained into the air.
They are directly fitted on the tank.

Available features:
- Male threaded connections up to 1 1/2", for a maximum flow rate of 3000 l/min.
- Replaceable filter element.
- Fine cellulose and microfibre filtration, to get a good cleanliness level into the reservoir. Polyester media is an option for heavy environmental conditions (High humidity, sand ….)
- Visual clogging indicator
- Antisplash, to avoid fluid coming out through the air breather due to sloshing
- Filling basket, to hold the coarse contamination contained into the fluid and to diffuse the fluid flow into the tank

Common applications:
- Hydraulic systems
- Mobile machines
- Industrial equipment

Flow rate Δp 0.02 bar

	Flow rate [l/min]	
Filtration rating	A03	L10
SAP115 length 1 - G1"	1830	2170
SAP115 length 2 - G1"	2800	2800
SAP115 length 1 - G1 1/2"	1995	2330
SAP115 length 2 - G1 1/2"	3000	3000

Materials
- Cover/flange: Polyamide
- Filter element: Microfibre, Resin impregnated paper
- Connection: Polyamide
- Seals: NBR, FPM

Clogging indicators
- Manual reset
- Set pressure 0.062 bar ±10%

Temperature
From -25 °C to +100 °C

Weight
SAP 115 length 1 0.410 kg
SAP 115 length 2 0.525 kg



Designation & Ordering code

COMPLETE FILLER PLUG / COMPLETE AIR FILTER

Configuration example: SAP115 | 2 | A | A03 | A | 1 | A | P01

Series
SAP115

Length
1 | **2**

Connections
A G 1" **C** G 1 1/2"

Filtration rating
A03 Inorganic microfiber 3 µm
L10 Resin impregnated paper 10 µm

Seals
A NBR

Version
0 Standard **1** With anti-splash feature

Clogging indicator
A Without indicator
B With visual clogging indicator

Execution
P01 MP Filtri standard
Pxx Customized

FILTER ELEMENT

Configuration example: A115 | 2 | A03 | P01

Filter element series
A115

Length
1 | **2**

Filtration rating
A03 Inorganic microfiber 3 µm
L10 Resin impregnated paper 10 µm

Execution
P01 MP Filtri standard
Pxx Customized

SAP115							
Length	**Connections**	**H [mm]**	**H1 [mm]**	**H2 [mm]**	**H3 [mm]**	**H4 [mm]**	**A/F [mm]**
1	A	106	18	55	17	42	41
	C	111	23	55	22	42	55
2	A	170	18	80	17	106	41
	C	175	23	80	22	106	55

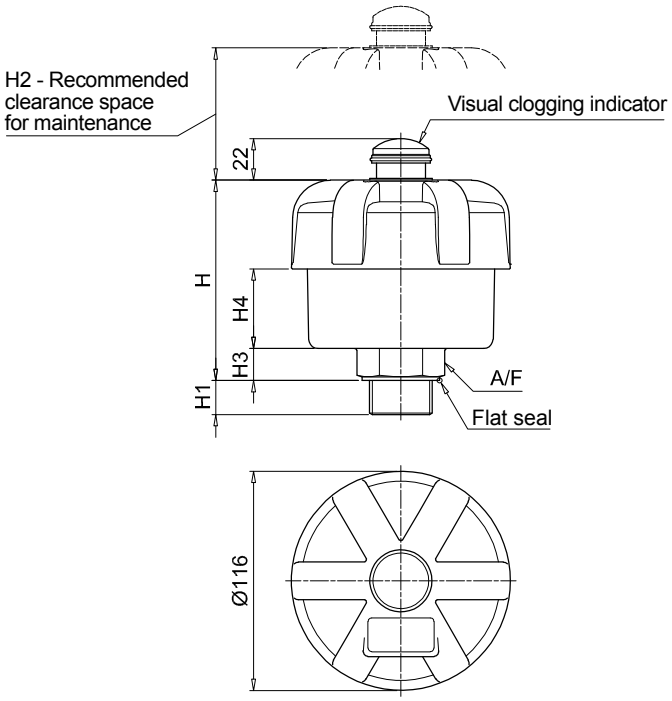

WORLDWIDE NETWORK

CANADA • CHINA • FRANCE • GERMANY • INDIA • SINGAPORE
UNITED ARAB EMIRATES • UNITED KINGDOM • USA



MPFILTRI®

PASSION TO PERFORM

mpfiltri.com
Scan or click me!

MP Filtri reserves the right to make modifications to the models and versions of the described products at any time for both technical and/or commercial reasons.
For updated information please visit our website: www.mpfiltri.com. The colors and the pictures of the products are purely indicative.
Any reproduction, partial or total, of this document is strictly forbidden. All rights are strictly reserved

MF001000034
EN - 2026.06